READY TO RACE

890 DUKE, orange 2022 EU 2022

ART.-NR.: F9703V1EN

All information contained is without obligation. KTM Sportmotorcycle GmbH particularly reserves the right to modify any equipment, technical specifications, prices, colors, shapes, materials, services, service work, constructions, equipment and the like so as to adapt them to local conditions or to cancel any of the above items, all without previous announcement and without giving reasons. KTM may stop manufacturing certain models without previous notice. KTM shall not be held liable for any deviations of availability and/or ability to deliver, illustrations, descriptions, printing and/or other errors. The illustrated models partly contain extra equipment, which is not applied to standard models.

© by KTM Sportmotorcycle GmbH, Mattighofen AUSTRIA; All rights reserved; Reprint, also in extracts, with written allowance of KTM Sportmotorcycle GmbH, Mattighofen only.

FRONT FORK, TRIPLE CLAMP

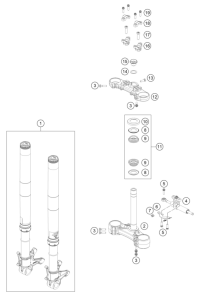

4

FRONT FORK DISASSEMBLED

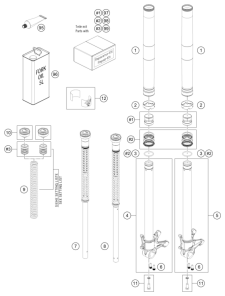

5

HANDLEBAR, CONTROLS

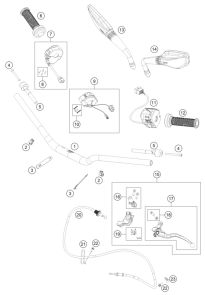

6

FRAME

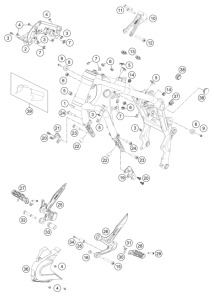

7

SUBFRAME

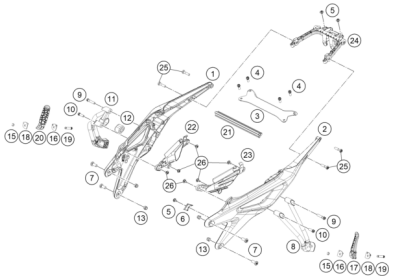

8

SIDE / CENTER STAND

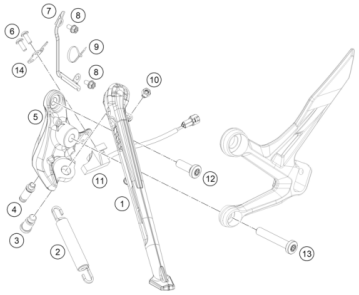

9

SHOCK ABSORBER

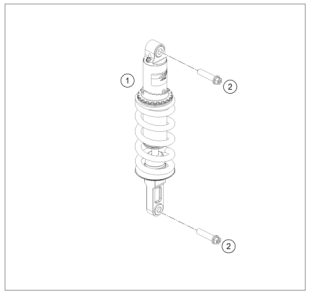

10

SHOCK ABSORBER DISASSEMBLED

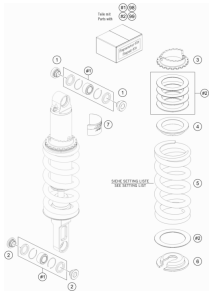

11

SWING ARM

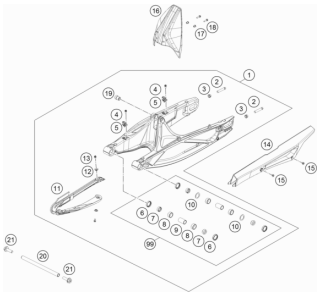

12

EXHAUST SYSTEM

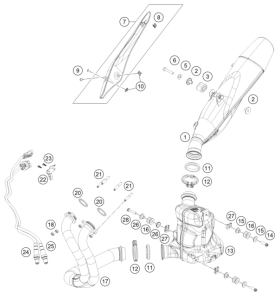

13

AIR FILTER

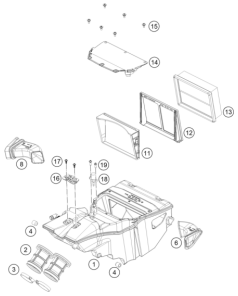

14

TANK, SEAT

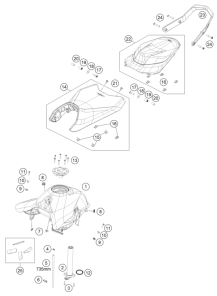

15

FUEL PUMP

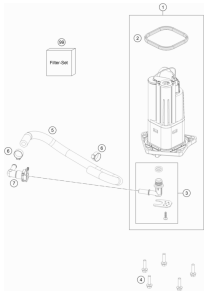

16

MASK, FENDERS

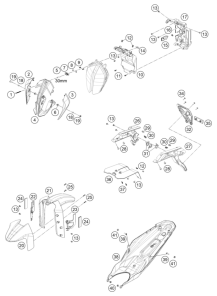

17

COVER

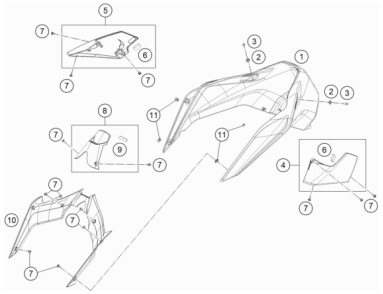

19

DECAL

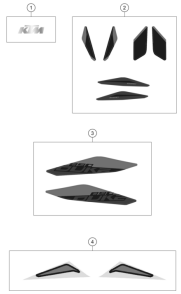

20

FRONT WHEEL

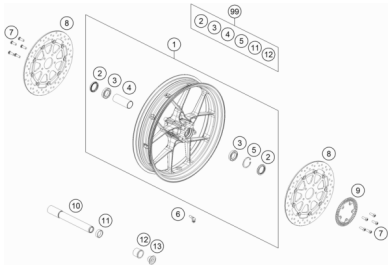

21

REAR WHEEL

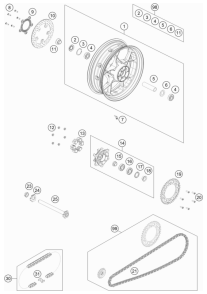

22

WIRING HARNESS

23

BATTERY

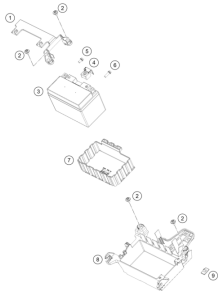

24

FRONT BRAKE CONTROL

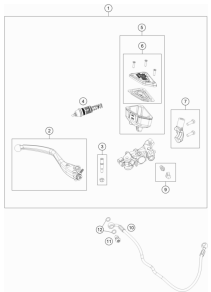

25

REAR BRAKE CONTROL

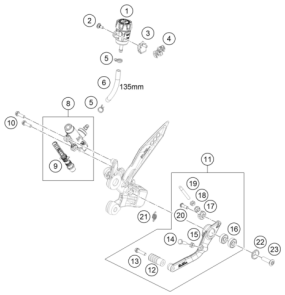

26

FRONT BRAKE CALIPER

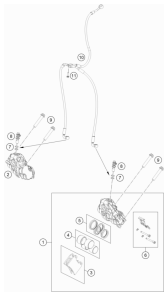

27

REAR BRAKE CALIPER

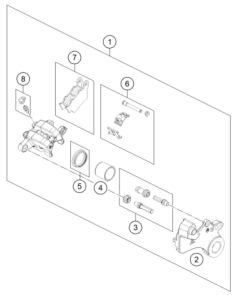

28

LIGHTING SYSTEM

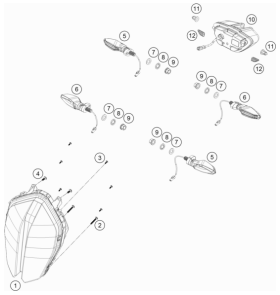

29

INSTRUMENTS / LOCK SYSTEM

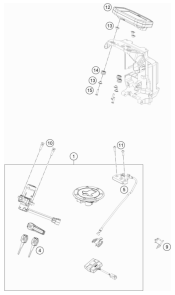

30

EVAPORATIVE CANISTER

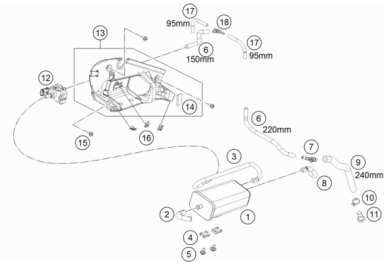

31

SEPERATE ENCLOSURE

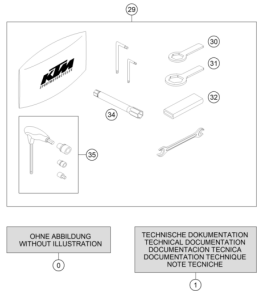

32

ANTIBLOCK SYSTEM ABS

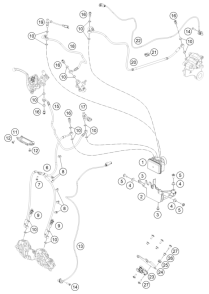

33

TECHNIC INFORMATION STICKER

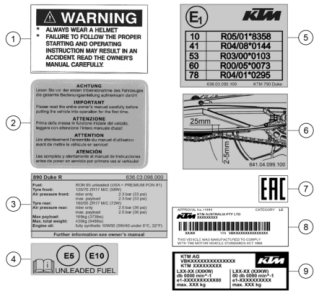

34

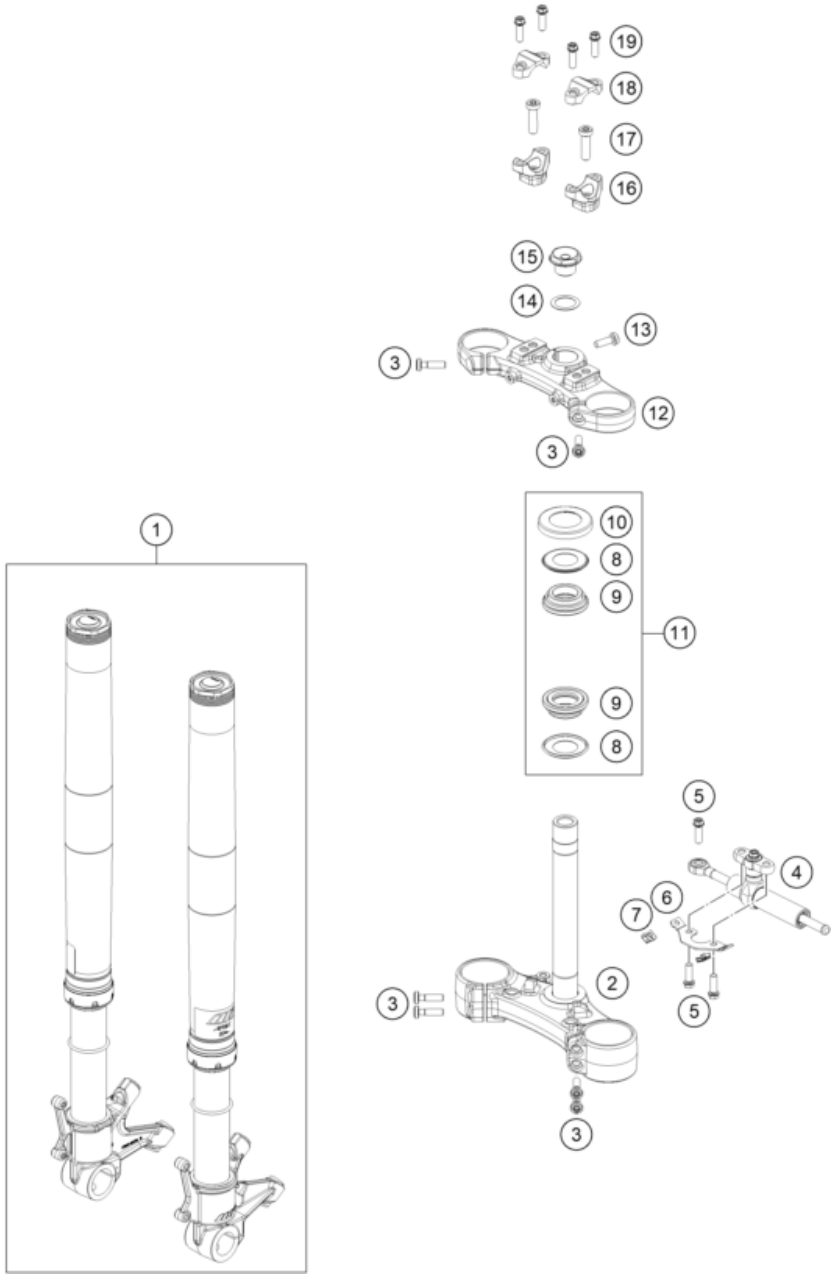

216360110

POS	PARTNUMBER	PARTNAME	PIECE
1	0636C126U201102	Fork KTM 890 Duke 21	1
2	6360103203230S	Triple clamp bottom cmpl. X=32mm black	1
3	0035080306	SHCS M8x30 TX45	4
4	16181R54E	Steering damper cpl.	1
5	0025080256S	HH COLLAR SCREW M8X25 TX40	3
6	6410104400033	Retaining bracket brake line guide	1
7	69008021080	clip nut M5	2
8	69001084100	Stearing head gasket	2
9	69001181000	STEERINGHEAD KPL.17	2
10	69001086100	PROT. RING STEER. HEAD BEARING	1
11	69001181010	Stearing head rep. Kit	1
12	6410103403230S	Upper Triple Clamp	1
13	0035080256S	ISA collar screw M8x25 ISA45	1
14	63601042000	Shim ring	1
15	54801036000C1	Steering head screw M20x1,5 WS_27	1
16	5940103903230	HANDLEBAR SUPPORT D=28 H=32 BL	2
17	0032100356S	AH-COLLAR SCREW M10X35 ISA45	2
18	7720103800030	HANDLEBAR CLAMP 28MM	2
19	0025080256	HH collar screw M8x25	4

56224

* NEW PART

X ON DEMAND

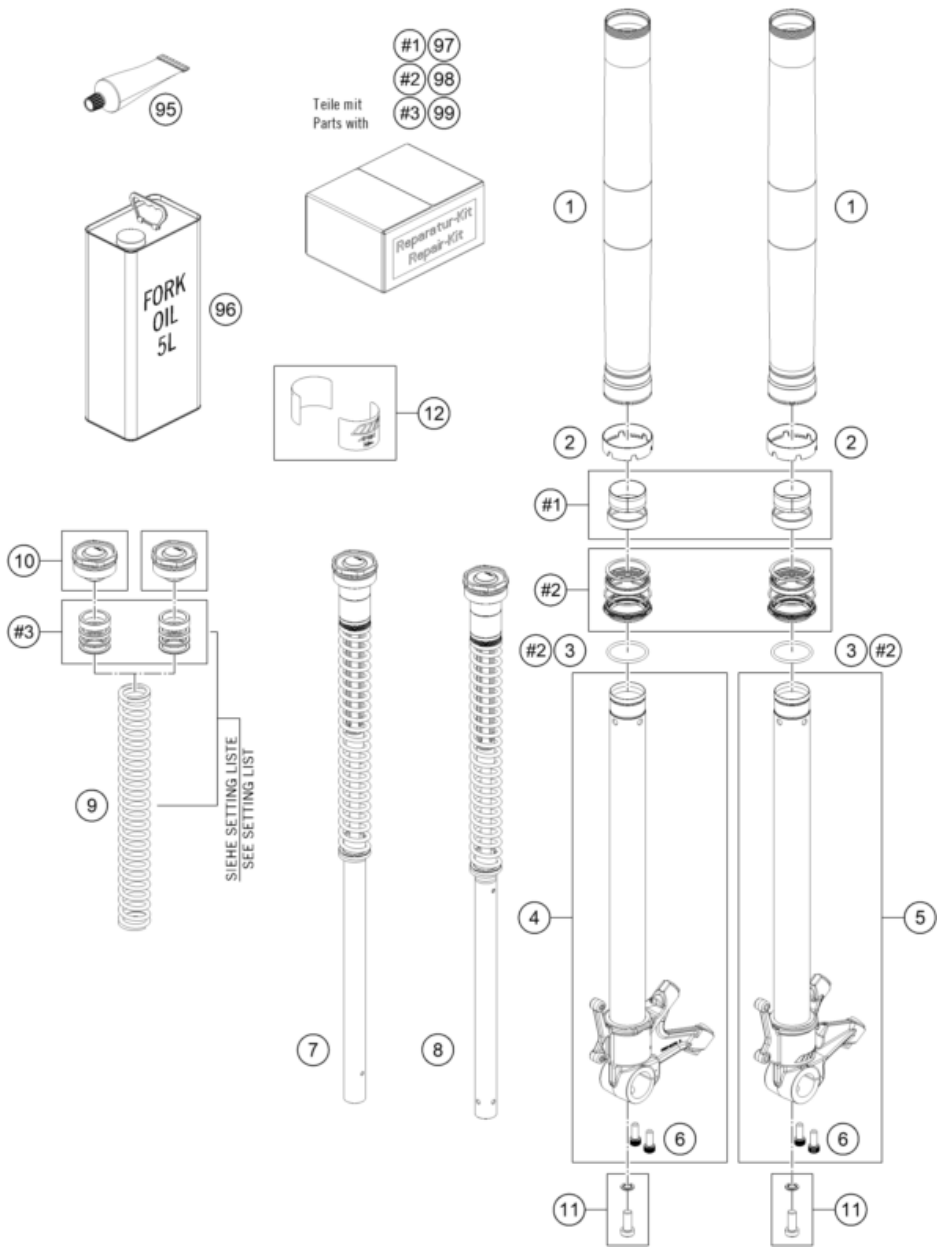

216360130

POS	PARTNUMBER	PARTNAME	PIECE
1	43578257	fork outer tube 44,33x515 dt54 db57	2
2	43578206	Fork protection ring d43	2
3	43578219	O-ring 40x2,5 VMQ70 red ISO 3601	2
4	43578097S1	Fork shoe right d43mm cmpl.	1
5	43578096S1	Fork shoe left d43mm cmpl.	1
6	0025080206	HH collar screw M8x20	4
7	43578176S7	Cartridge right 890 Duke 21 cpl.	1
8	43578195S7	cartridge left 890 Duke 21 cpl.	1
9	43578297S	main spring (38.2) 7.5-320 fork	1
10	43578209S1	screw cap M51x1.5 cpl.	2
11	43578177S1	HS cylinder-head screw M10x25 set	x
12	52000210SET	Sticker set APEX OC 90x40	1
95	T511	SILICONE GREASE F. DUST STRI	x
96	48601166S1	Fork Fluid Viscosity 4.0 5L	x
97	R14042	GUIDE BUSHING SET	x
98	R516T	Fork sealing kit 43mm	x
99	RP80002	Shim Kit Fork	x

54895

* NEW PART

X ON DEMAND

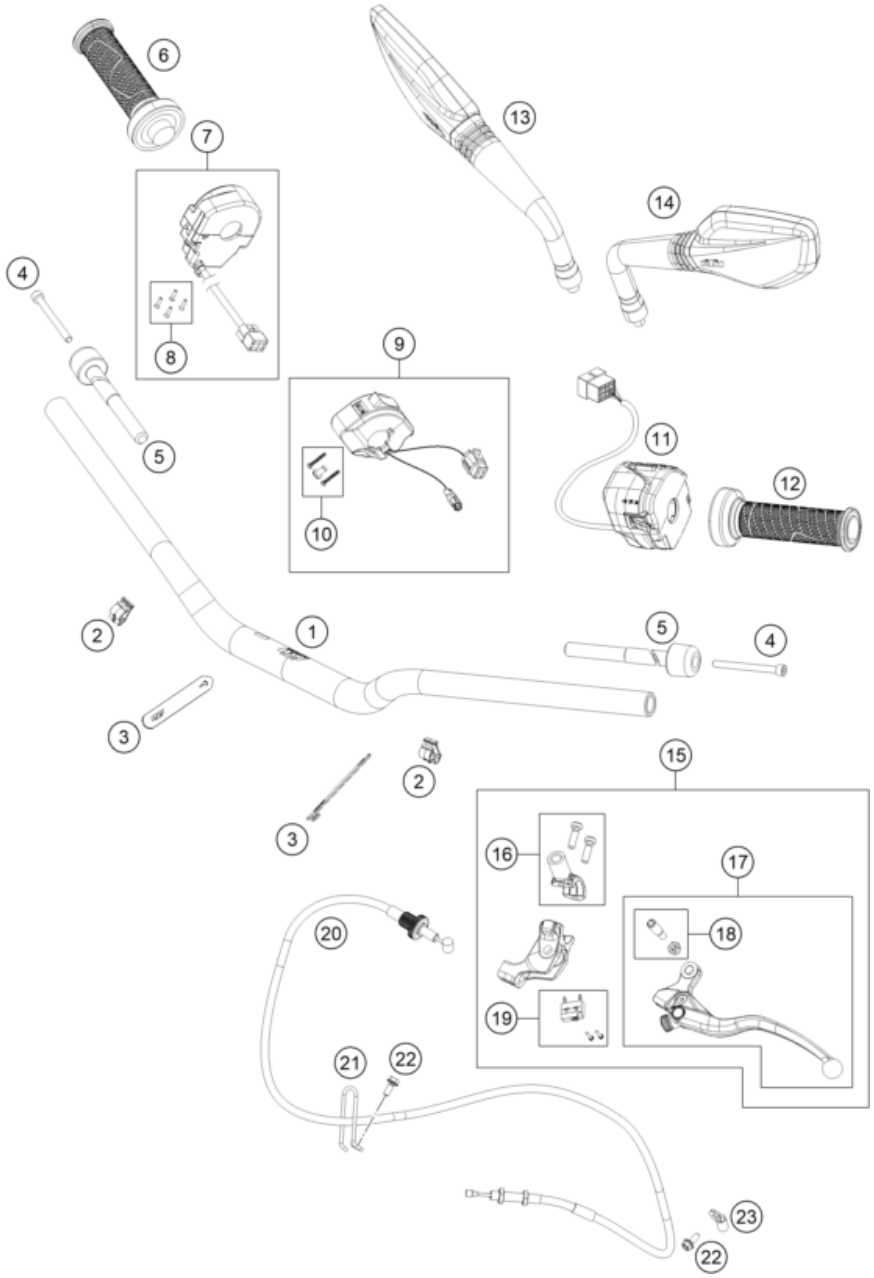

216360210

POS	PARTNUMBER	PARTNAME	PIECE
1	6410200100030	Handlebar L=743 mm, Dia.=28.5 mm	1
2	83013026000	CABLE GUIDE	2
3	60011093045	RUBBER CABLE TIE 45MM 03	2
4	0912060653	SHCS DIN 912 M6x65	2
5	61002004000	handlebar weight	2
6	60702012000	Grip tube (no heating)	1
7	60711012000	Ride-by-wire without throttle tube	1
8	76011073110	SCREW SET START-STOP SWITCH	1
9	76011074000	emergency OFF switch	1
10	61411174010	Screw set start-stop switch	1
11	76011170100	Handlebar switch left	1
12	60702039100	Grip LHS w/o heater	1
13	90112041000	MIRROR R/S	1
14	90112040000	MIRROR L/S	1
15	6410203100030	Clutch lever cmpl. blk.	1
16	6410204400030	Clamp cpl.	1
17	6410204000030	Clutch lever cpl.	1
18	64102038000	Kit lever pin	1
19	64111049000	Lever switch	1
20	64102090000	Clutch cable	1
21	64102097000	Clutch cable wire guide	1
22	0025050126	HH collar screw M5x12 TX30	2
23	64132070000	PVC clamp 6.4 MM Heyman	1

56225

* NEW PART

X ON DEMAND

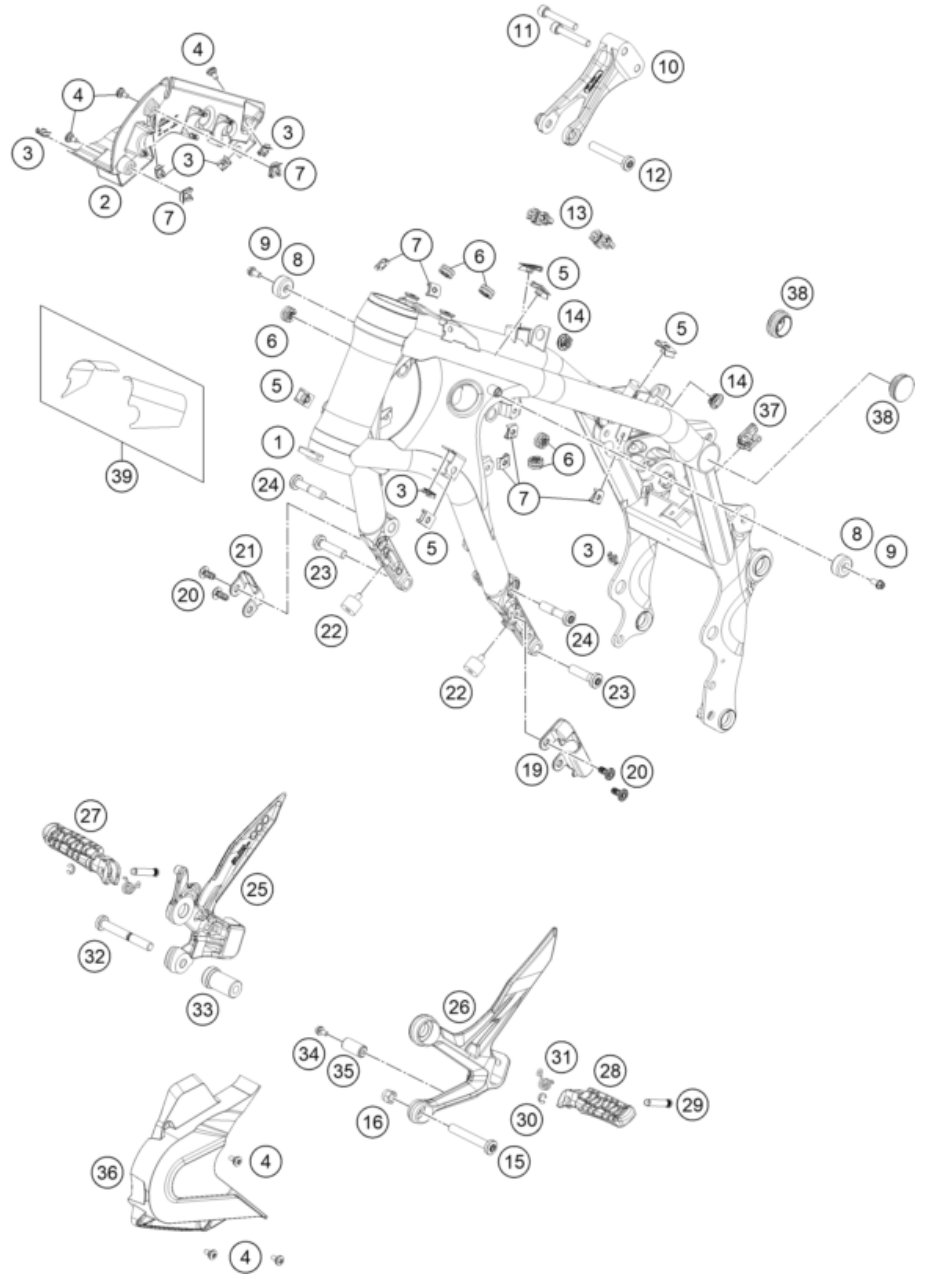

216360310

POS	PARTNUMBER	PARTNAME	PIECE
1	64103001200C1	Frame	1
2	63603082000	Frame trim, right	1
3	69008021080	clip nut M5	6
4	69008021160	special screw M5x12	6
5	54603048100	clip nut M6	5
6	62142041000	DAMP. COMPONENT ABS MODUL	5
7	54603048200	RANGE CHANGE METAL NUT M5	7
8	50307014100	Tank support	2
9	0025060126S	Hex collar screw M6x12 ISA30 self-lockin	2
10	6410301300033	Engine strut black	1
11	014579080506S	CYL. SCREW DIN14579 M8X50 SS	2
12	0035100609S	AH-COLLAR SCREW M10X60 ISA45	1
13	64142046000	Bracket ABS line dia7.5	2
14	47106003160	quick release rubber grommet	2
15	0035100656S	ISA screw, M10x65 ISA45	1
16	54310086100	SELF LOCKING NUT M10 CU WS=14	1
19	64103034000	Cable Guidance left	1
20	64103034120	Fastening plugs M8	4
21	64103035000	Cable Guidance right	1
22	43205062100	silentbloc 20x15-M6x10-(1)	2
23	0035100409S	ISA collar screw M10x40 ISA45	2
24	0035100456S	ISA screw M10x45 ISA45	2
25	6410303901033	Front footpeg bracket, right	1
26	64103038100C1	Front footpeg bracket left	1
27	61003051000	FOOTREST FRONT R/S CPL. 05	1
28	61003050000	FOOTREST FRONT L/S CPL. 05	1
29	60003044100	footrest bolt, rear	2
30	0799060003	retaining washer DIN 6799 - 6	2
31	76003042000	RETURN SPRING FOOTREST	2
32	0035100809S	ISA collar screw M10x80 ISA45	1
33	6410303900133	Distance piece	1
34	0025050106	HH collar screw M5x10 TX30	1
35	6410303800133	Roller	1
36	64103096000	Sprocket Cover	1
37	64111059020	Cable holder, attachable	1
38	64103088000	Frame locking cap	2
39	64103092044	Set protection sticker frame	1

58107

* NEW PART

X ON DEMAND

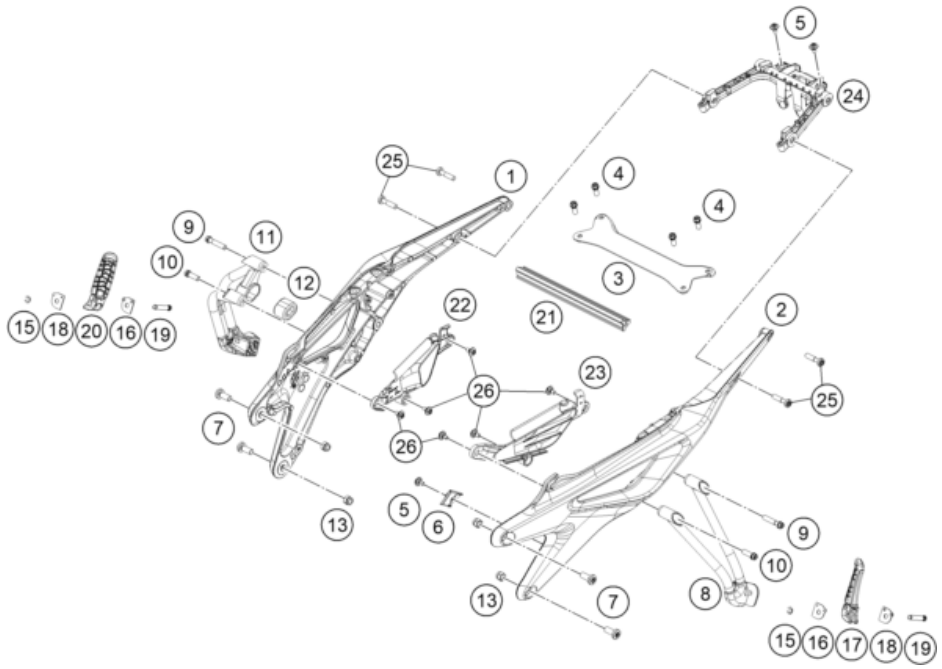

206410315

POS	PARTNUMBER	PARTNAME	PIECE
1	64103002006C1	Subframe right black	1
2	64103002005C1	Subframe left black	1
3	6410300200430	Cross member	1
4	0025080186S	HH collar screw M8x18 ISA40 SS	4
5	83008000012	special screw M6x12x3	3
6	64103002010	cable holder	1
7	0035100309S	SHCS M10x30 TX45	4
8	6410304800033	Footrest carrier rear/left	1
9	0025080406S	Collar screw M8x40 ISA40 SS	2
10	0025080256S	HH COLLAR SCREW M8X25 TX40	2
11	6410304900033	Footrest carrier rear/right	1
12	61305068000	DAMPING RUBBER	1
13	54310086100	SELF LOCKING NUT M10 CU WS=14	4
15	0799060003	retaining washer DIN 6799 - 6	2
16	60003152000	ENGAGE PANEL FOOTREST L/S 03	2
17	60003050000	FOOTREST CPL. L/S REAR 03	1
18	60003052000	ENGAGE PANEL FOOTREST R/S 03	2
19	60003044100	footrest bolt, rear	2
20	60003051000	FOOTREST CPL. R/S REAR 03	1
21	64103004000	Strut	1
22	64106041050	Cover inlet port right	1
23	64106040050	Cover inlet port left	1
24	64108019050	rear reinforcement	1
25	0035080356S	SCREW M8X35 ISA45 SS	4
26	83008000015	SPECIAL SCREW M6X15X3	6

53311

* NEW PART

X ON DEMAND

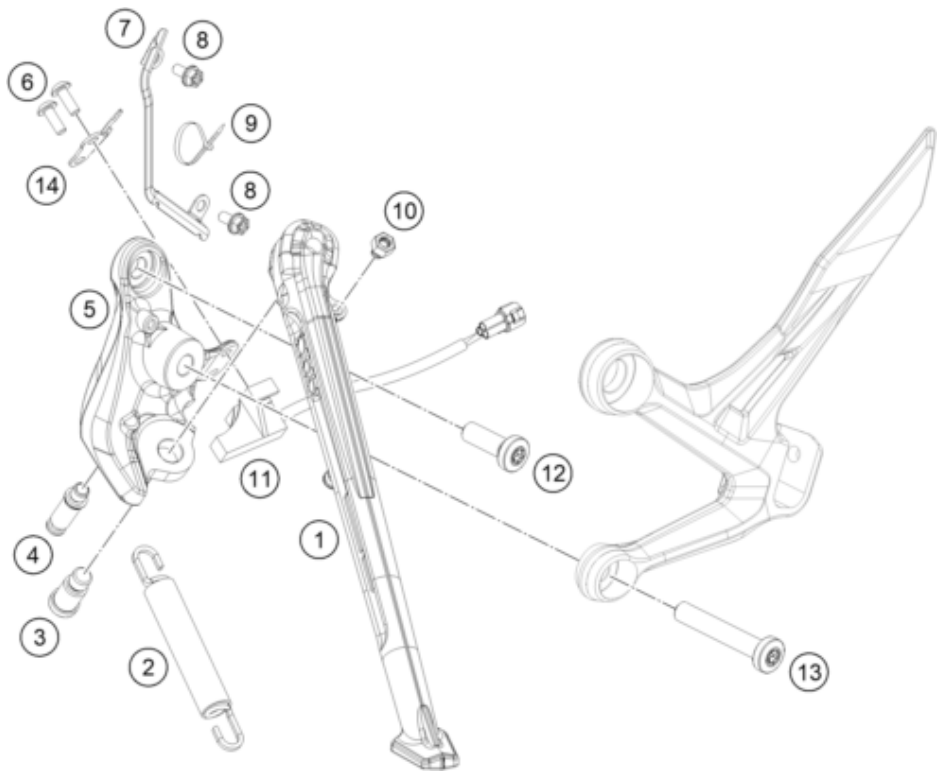

216360360

POS	PARTNUMBER	PARTNAME	PIECE
1	6410302300033	Sidestand	1
2	61003024000	SPRING L=116 MM 05	1
3	62503027200	SCREW FOR SIDE STAND M10X31,2	1
4	64103028001	Special screw stand spring	1
5	6410302610033	Side Stand Bracket	1
6	58605083014	SCREW M5X14 TORX 25 07	2
7	64103001099	Racket side-stand-cable	1
8	0025050106	HH collar screw M5x10 TX30	2
9	44011076140	CABLE TIE 140/2,5MM BLACK	3
10	90103029000	MAGNET HOLDER	1
11	93511045000	SWITCH SIDE STAND	1
12	0035100309S	SHCS M10x30 TX45	1
13	0035100656S	ISA screw, M10x65 ISA45	1
14	63603023060	Cable holder, side stand	1

56226

* NEW PART

X ON DEMAND

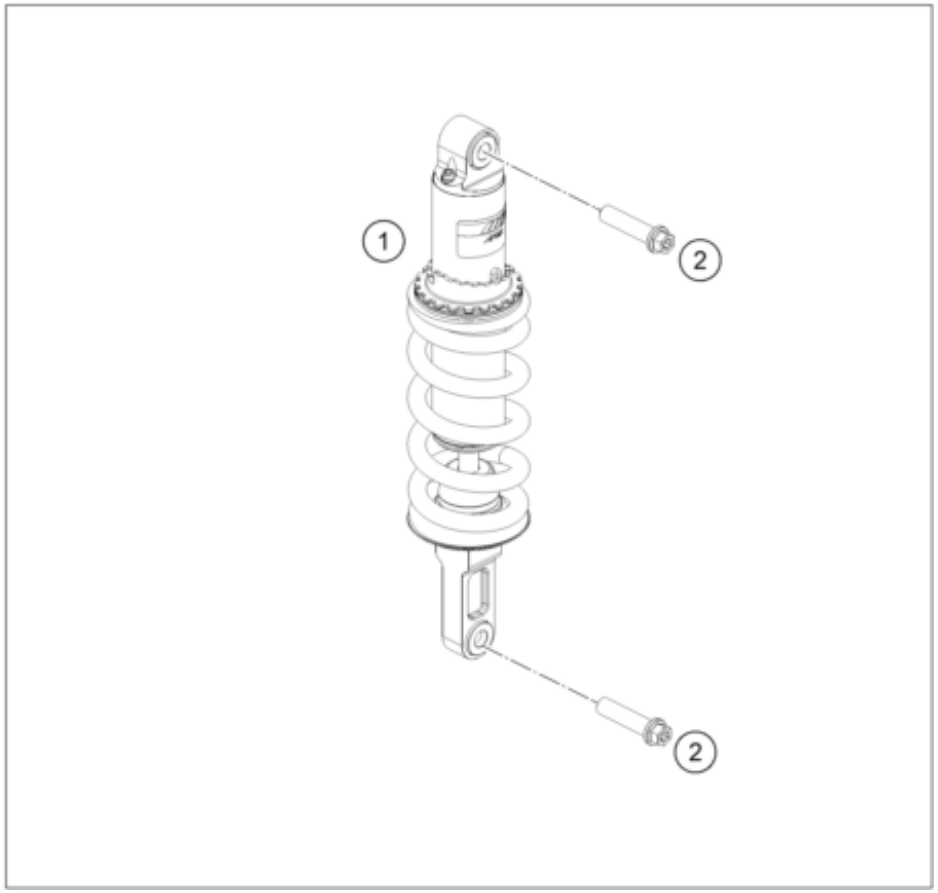

POS	PARTNUMBER	PARTNAME	PIECE
1	0636C426U313102	Shock absorber KTM 890 Duke 21	1
2	0025120506S	HH COLLAR SCREW M12X50 TX45	2

216360410

56223

* NEW PART

X ON DEMAND

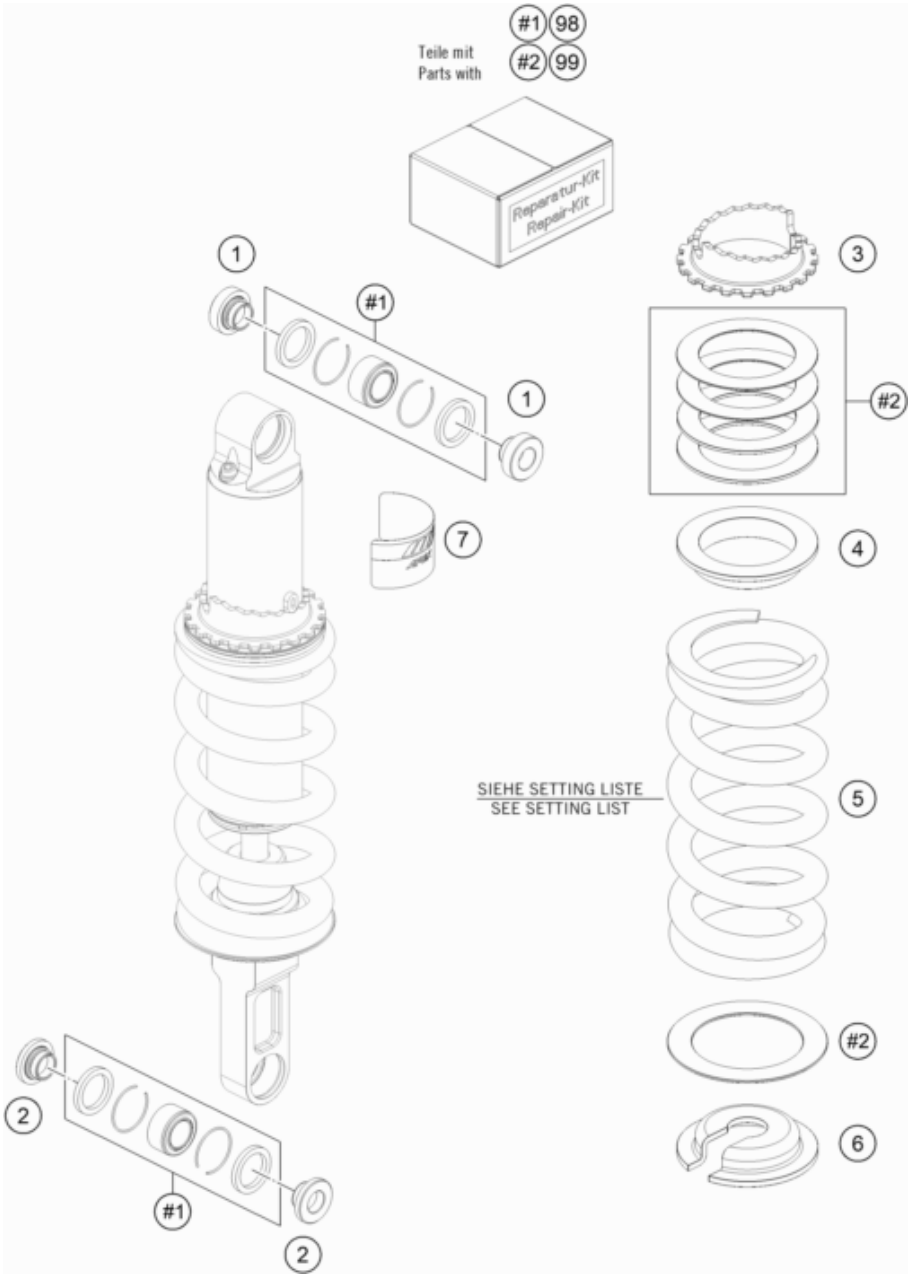

216360430

POS	PARTNUMBER	PARTNAME	PIECE
1	46180064	Bearing bush 12x15/18/24,5x13,5	2
2	46180007	Distance bush 12x15/18/24,5x10,5	2
3	46148166	PA adjuster	1
4	46148223	Spring retainer 50.7x74x3 black	1
5	S80981000200020	Spring (59) 140-185 shock white	1
6	46148098	Spring retainer 21x54,8x-8	1
7	52000213	Sticker APEX 90x29	1
98	R12012	Ball joint bearing kit top 12mm	x
99	RP80004	Washer kit shock absorber	x

54896

* NEW PART

X ON DEMAND

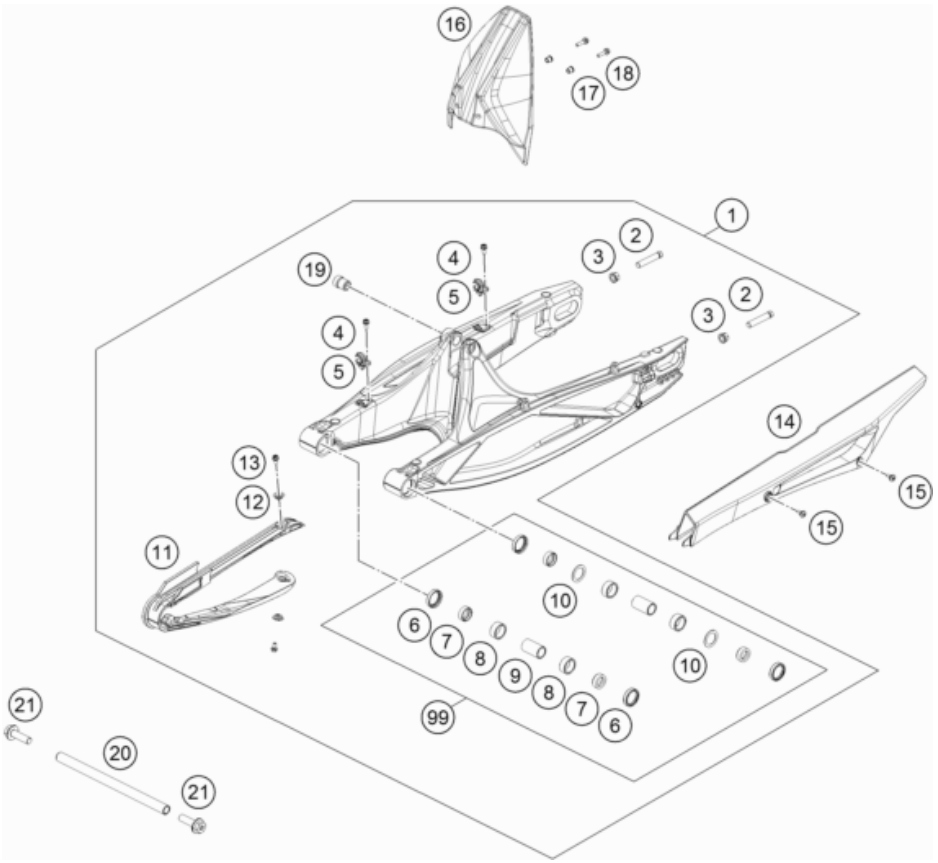

186410490

POS	PARTNUMBER	PARTNAME	PIECE
1	6410403004433	Swingarm cpl. black	1
2	50304040100	screw M10x1.25x50 WS10	2
3	58414030000	HH COLLAR NUT M10X1,25 WS=13	2
4	0025050126	HH collar screw M5x12 TX30	2
5	60104142000	Clamp	2
6	0760253270	radial shaft seal 25x32x7	4
7	54804034000	BUCKET F. SHAFT SEAL RING 03	4
8	0618222812	NEEDLEBEAR HK2212V 22/28/12 MB	4
9	59404032000	BEARING SLEEVE 17X22X38,7 03	2
10	54603036000	STOP DISK 22,2X31,7X1	2
11	64104066000	chain slide protection	1
12	46104066050	BUSH FOR CHAINSLIDER GUARD 02	2
13	0025050106	HH collar screw M5x10 TX30	2
14	64104061000	chainguard	1
15	69008021160	special screw M5x12	2
16	64104050000	Rear Fender	1
17	64104150010	Bushing 5.5x8.3x9	2
18	0025050206	HH collar screw M5x20 TX30	2
19	64104030020	Bushing Shock Mounting	1
20	64104037000	swing arm bolt	1
21	76504038000	SPECIAL SCREW M12X40 SW19	2
99	79004030010	SWING ARM REPAIR KIT SX-F	x

55682

* NEW PART

X ON DEMAND

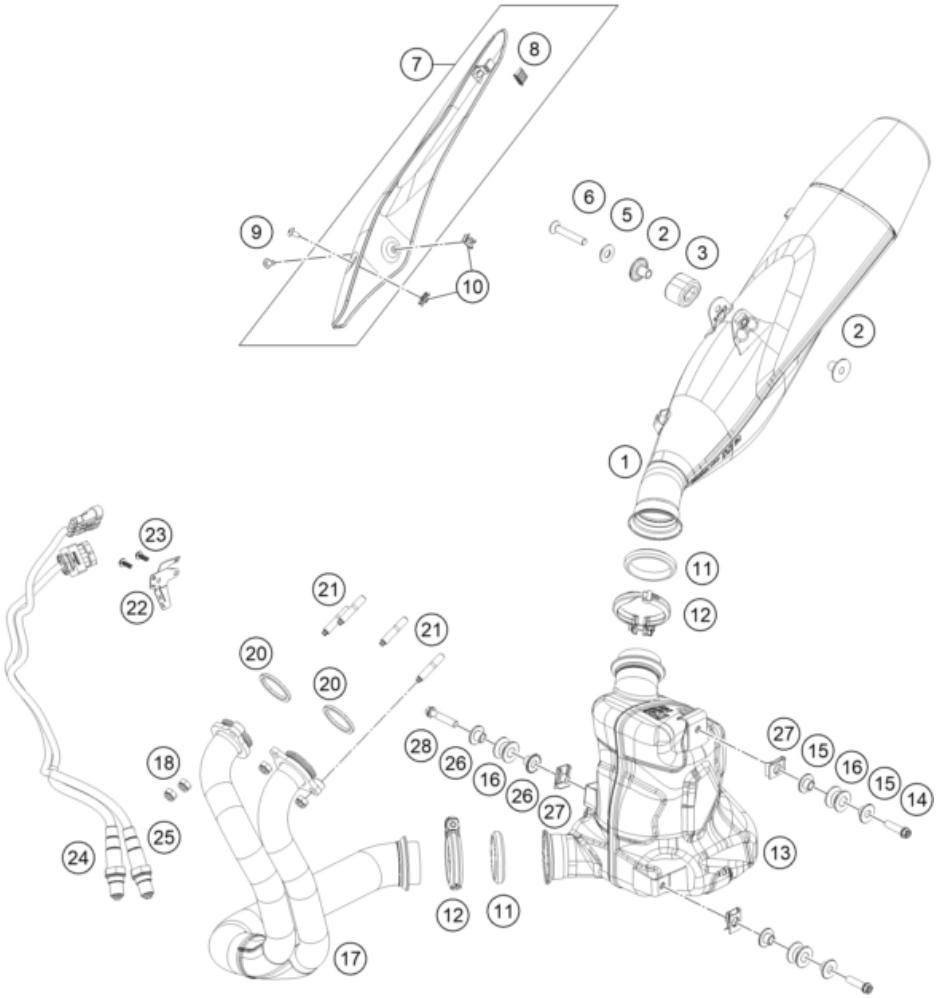

216360510

POS	PARTNUMBER	PARTNAME	PIECE
1	64105183000	Silencer	1
2	61305069000	BUSHING 8,5X11X29	2
3	61305068000	DAMPING RUBBER	1
5	60405069000	conical seat Alu	1
6	0019080506	COUN.-SUNK SCREW M8X50 ISA10.9	1
7	64105011000	Head Protection with mounting	1
8	27005011011	DAMPING ELEMENT SILICON	1
9	78105081010	SCREW TORX M5X10	2
10	69008021080	clip nut M5	2
11	69005105005	Manifold gasket	2
12	63605058100	Exhaust clamp tube 50 mm	2
13	63605050000	Pre-muffler	1
14	0025080356S	HH COLLAR SCREW M8X35 TX40	2
15	58405050065	collar bushing 8.5x12x23.5x10	4
16	54305068100	damp. component silicone grey	3
17	63605007000	Manifold	1
18	51010086100	self-locking nut M8 Cu	4
20	64105005000	Exhaust gasket	2
21	63505015000	stud screw 835 M8x25 - 10.9	4
22	64142040020	Bracket lambda sensor signal	1
23	0081050141	EJOT PT screw K50x14	2
24	63541090000	O2 Sensor LSF 4	1
25	63541190000	O2 Sensor LSF 4	1
26	0800000901200	Collar bushing, 8.5x12x23.5x11.5	2
27	54603048000	RANGE CHANGE METAL NUT M8	3
28	0025080406S	Collar screw M8x40 ISA40 SS	1

57767

* NEW PART

X ON DEMAND

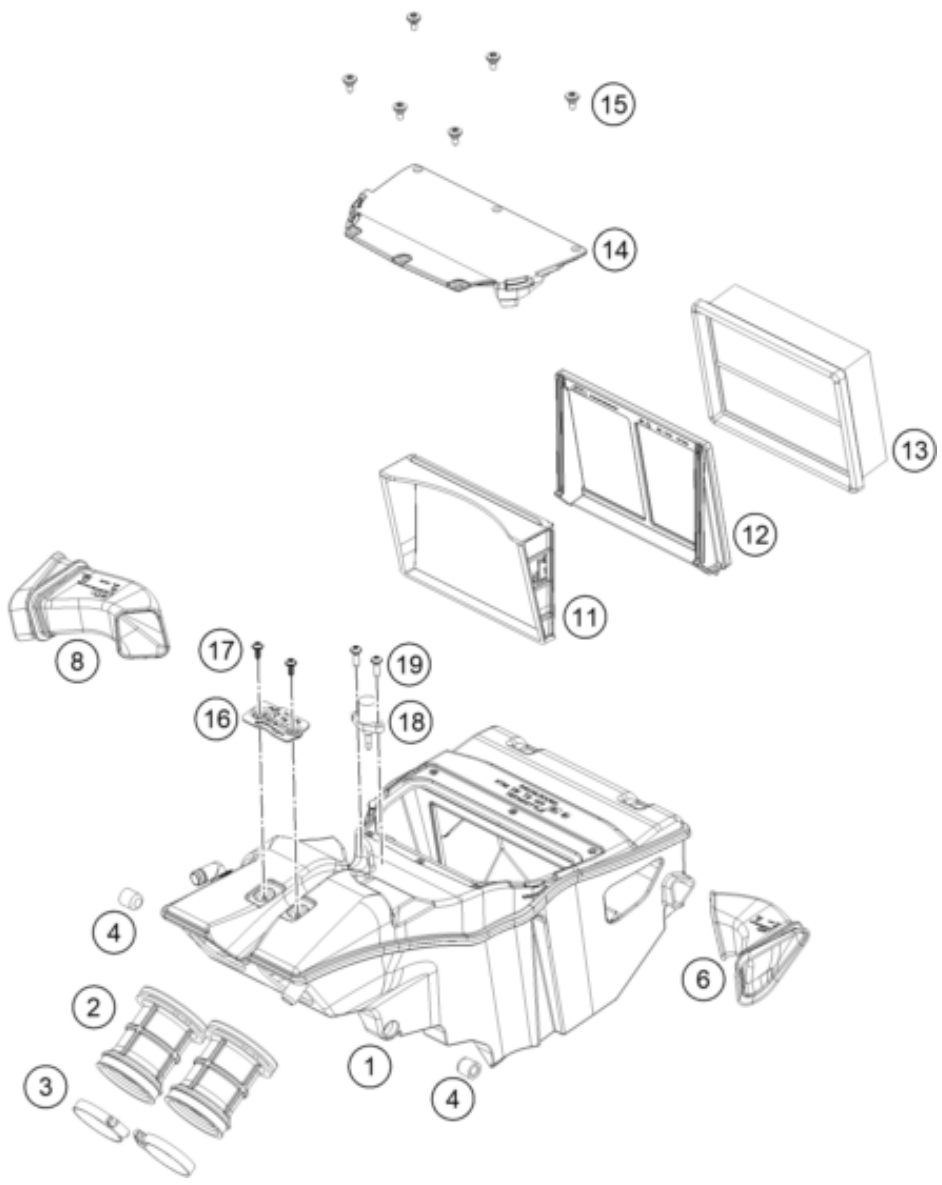

206360610

POS	PARTNUMBER	PARTNAME	PIECE
1	64106001100	Air filter box	1
2	63606026000	Intake trumpet	2
3	77236048000	HOSE CLAMP GEMI 58MM	2
4	76006014000	rubber grommet	2
6	64106040000	Spout left	1
8	64106041000	Spout right	1
11	64106001050	filter frame wedge	1
12	64106016000	filter frame	1
13	64106015000	Air Filter	1
14	64106002000	Airbox lid	1
15	69008021160	special screw M5x12	6
16	64106001030	cable holder	1
17	0081050121	EJOT PT screw K50x12	2
18	61041080000	AMBIENT-AIR TEMPERATURE SENSOR	1
19	0081050161	EJOT PT SCREW K50X16 1451	2

53834

* NEW PART

X ON DEMAND

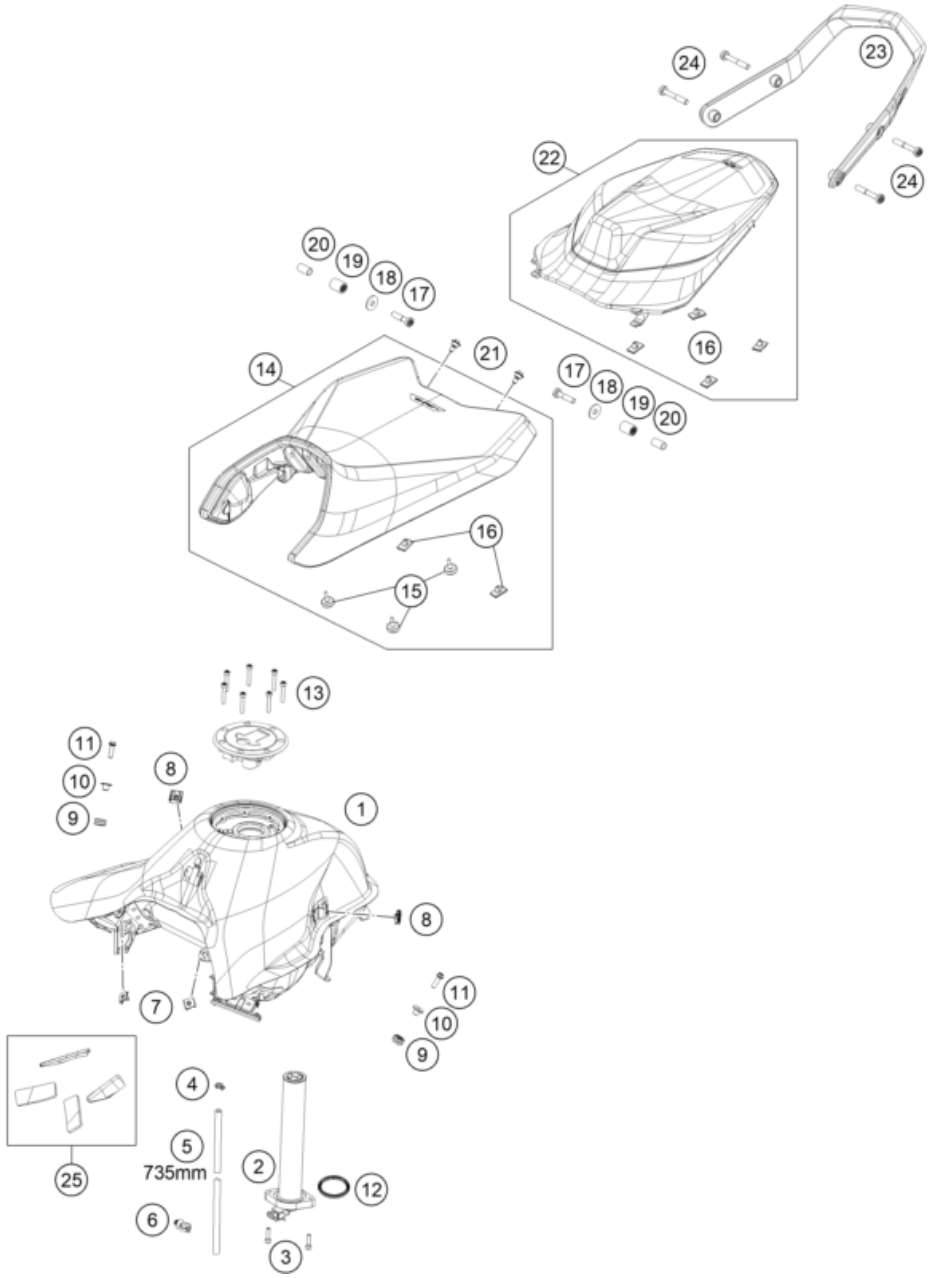

216360710

POS	PARTNUMBER	PARTNAME	PIECE
1	63607013000CC	Fuel tank steel	1
2	64107080100	Fuel level sensor	1
3	0912050203	AH SCREW DIN0912-M 5X20	2
4	58007117000	YDNAC-CLAMP 10107 10MM	1
5	78015019000	HOSE EPA D=6/10 L=2000MM	1
6	69011092000	CABLE TIE W. SOCKET D=6,5	1
7	54603048200	RANGE CHANGE METAL NUT M5	2
8	54603048300	RANGE CHANGE METAL NUT M6 INOX	2
9	62142041000	DAMP. COMPONENT ABS MODUL	2
10	61342041000	COLLAR BUSH 6,5X9X18X8,5	2
11	0025060206	HH collar screw M6x20 TX30	2
12	60307080090	GASKET FUEL LEVEL SENSOR	1
13	014579050166	Cap hd. screw ISO14579, M5x16-8.8, black	7
14	63607040000C1A	Rider´s seat	1
15	60006001021	DISTANCE RUBBER AIRBOX 03	3
16	77307040041	Isolation pad	6
17	0035080356	AH-COLLAR SCREW M8X35 ISA45	2
18	0021080003	WASHER DIN9021-A 8,4	2
19	60307048000	RUBBER SEAT-CONTACT SURFACE	2
20	61407049000	BUSHING 8.4X12X21.5	2
21	0900000601500S	Special screw M6x15x5,5-8.8 MK	2
22	64107047033	Passenger seat cmpl.	1
23	64112008100	Pillion Handle Bar	1
24	0035080506S	AH-COLLAR SCREW M8X50 ISA45	4
25	64107012000	Tank Protection Set Metamoll	1

58115

* NEW PART

X ON DEMAND

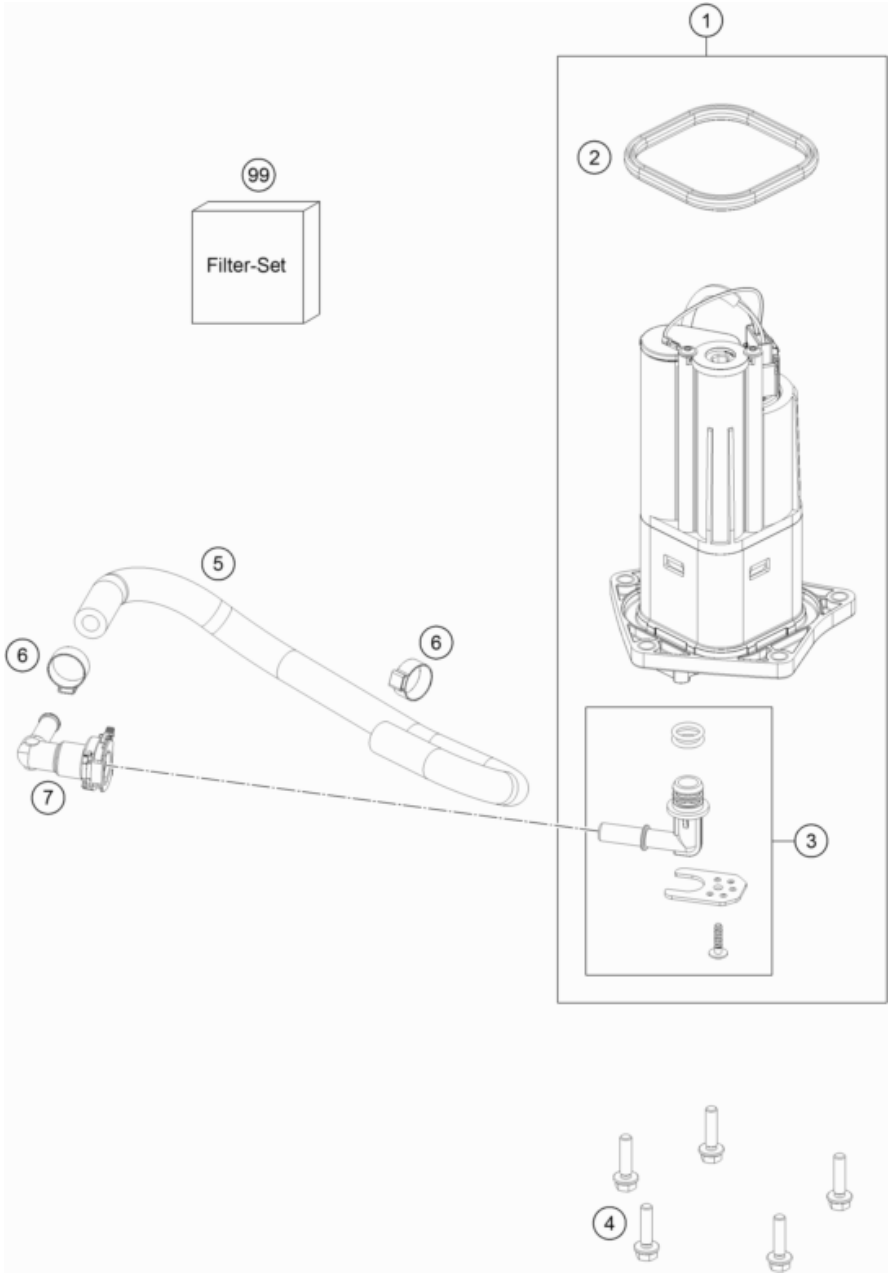

186410730

POS	PARTNUMBER	PARTNAME	PIECE
1	64107088000	Fuel pump cpl.	1
2	64107189000	Sealing	1
3	64107092000	Hydraulic connection	1
4	0025050206	HH collar screw M5x20 TX30	5
5	64107016040	Fuel hose with protective sleeve	1
6	00050157706	VARIABLE ONE-EAR CLAMP 15,7MM	2
7	76007028000	ELBOW CONNECTOR	1
99	64107090000	Filter kit	x

49813

* NEW PART

X ON DEMAND

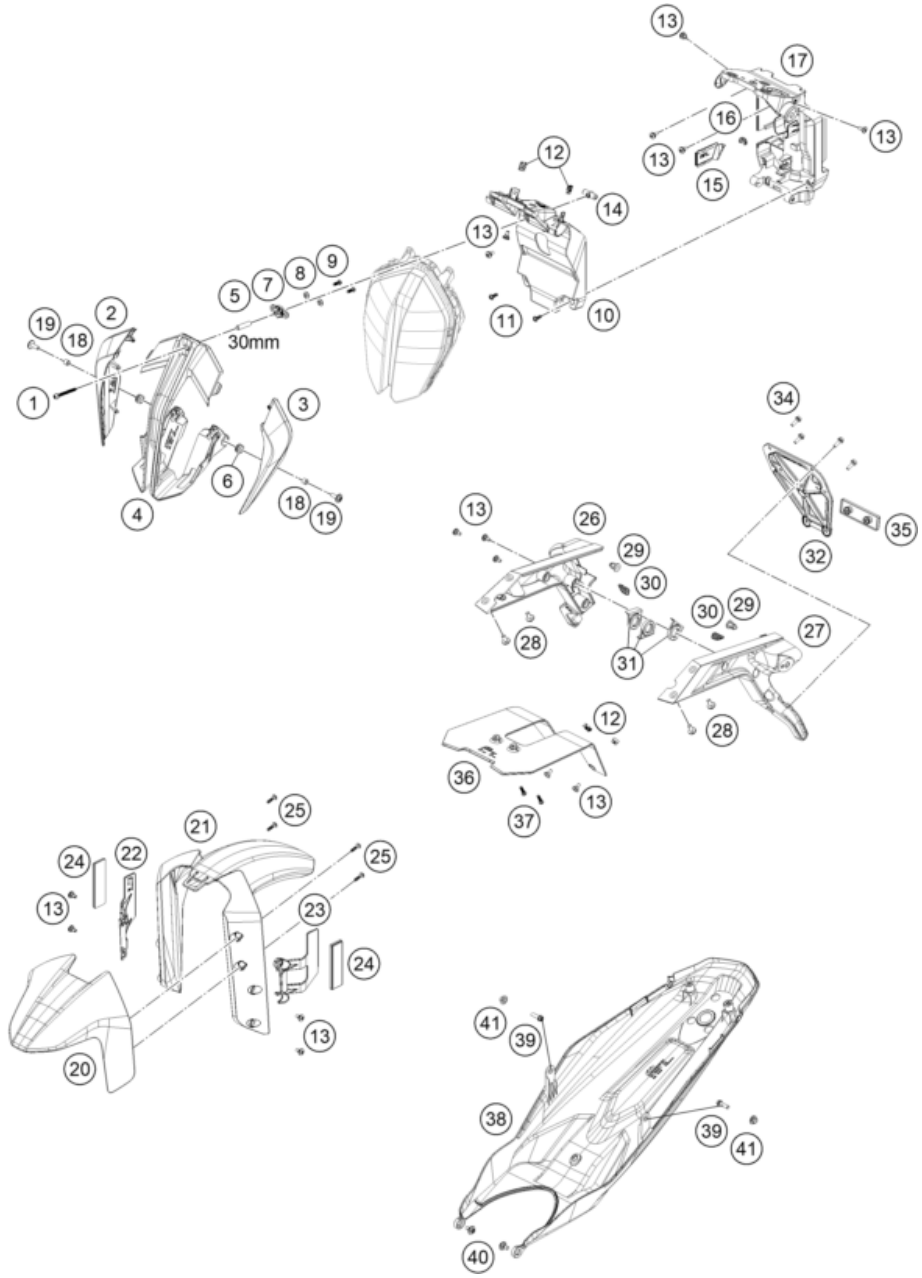

186410810

POS	PARTNUMBER	PARTNAME	PIECE
1	61614020010	EJOT PT SCHRAUBE 50X54	1
2	64108002000EB1	Mask spoiler right	1
3	64108003000EB1	Mask spoiler left	1
4	6410800100056	headlightmask centerpart	1
5	64114018001	Hose D=6/8 EPDM, Meter	1
6	60006001022	rubber grommet 9x11x16x8.5 mm	2
7	61614020100	Ballhead holder	1
8	61412032010	BUSH 13X7X3,3	2
9	0081250141	SCREW FOR PLASTIC PT K50X14T25	2
10	64114010010	Cover Mask Carrier	1
11	0081050141	EJOT PT screw K50x14	2
12	54603048600	RANGE CHANGE METAL NUT M5 INOX	4
13	69008021160	special screw M5x12	15
14	61614019100	Screwshaft	1
15	64114010030	Cable Cover Maskcarrier	1
16	64114010040	cable bushing mask carrier	1
17	64114010044	Maskcarrier EU assembled	1
18	69014014000	BUSHING 6,1X9,2X7,5 08	2
19	69014017000	SPECIAL SCREW M6X18 ISA30 08	2
20	64108010000EB1	Fender front part	1
21	64108011000	Fender rear Part	1
22	64112084000	Reflector holder, right	1
23	64112083000	Reflector holder, left	1
24	60012080100	SIDE REFLECTOR YELLOW ''CEV''	2
25	0081050181	SCREW FOR PLASTIC K50X18 T20	4
26	64108015020	numberplate holder right	1
27	64108015010	Numberplate Holder left	1
28	0024060156	HH collar screw M6x15 TX30	4
29	64108015060	Rubber damper top	2
30	64108015070	Rubber damper bottom	2
31	64108015050	cable holder numberplate holder	3
32	64112181000	Bracket for reflector	1
34	0025050166S	HH Collar Screw M5x16 ISA30 SS	4
35	58412080400	Rear reflector red	1
36	64108023010	Splash protection	1
37	0081050121	EJOT PT screw K50x12	2
38	64108019000	Tail Underpart	1
39	0025060206	HH collar screw M6x20 TX30	2

56227

* NEW PART

X ON DEMAND

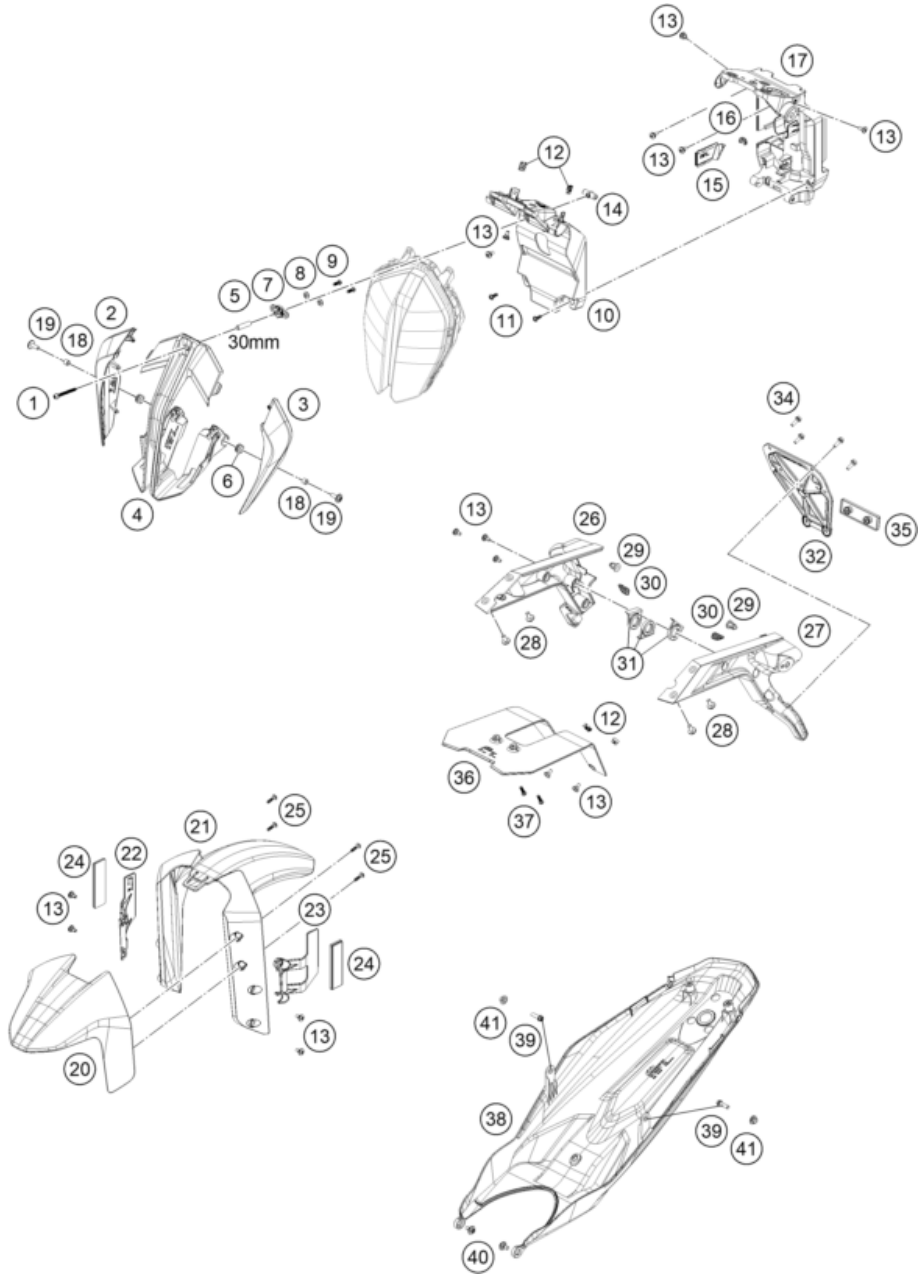

186410810

POS	PARTNUMBER	PARTNAME	PIECE
40	83008000012	special screw M6x12x3	2
41	50308053000	BUSH FOR SPOILER 6X11X16X7,5	2

56227

* NEW PART

X ON DEMAND

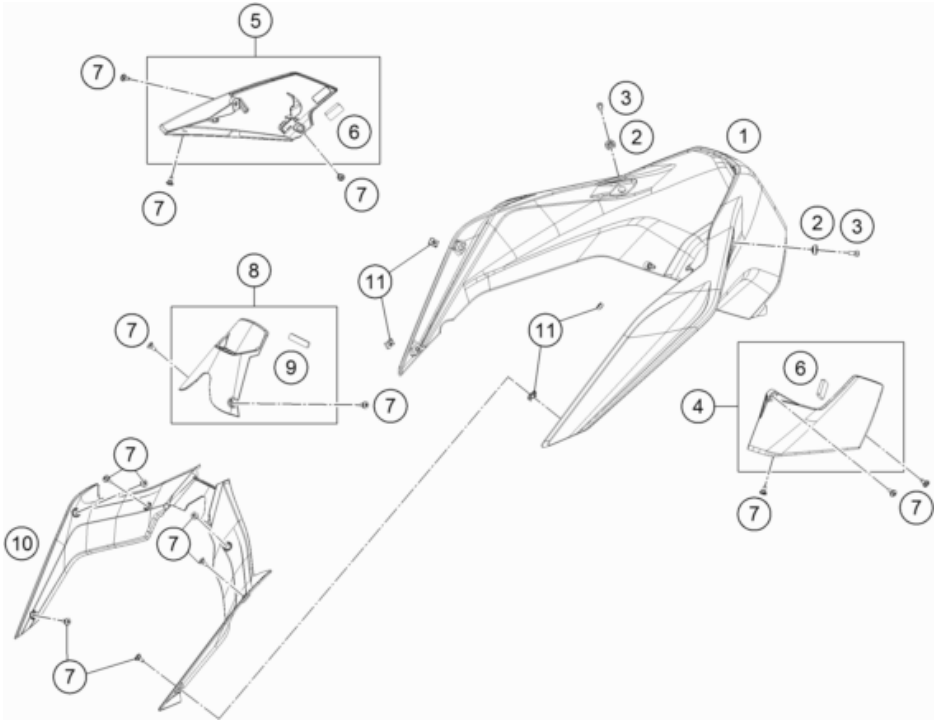

186410815

POS	PARTNUMBER	PARTNAME	PIECE
1	6410805400030	tankcover	1
2	6110804500033	Fasson Washers	2
3	014580060141	Cap head screw ISO 14580 M6x14	2
4	64108070044	Cover left	1
5	63608042044	Side fairing right cmpl.	1
6	64108070050	Metamoll for side cover	2
7	69008021160	special screw M5x12	14
8	64111068044	Ignition lock cover cmpl.	1
9	64111068010	Cellular rubber 45x10x3	1
10	64108064000	tankcover front	1
11	69008021080	clip nut M5	4

56235

* NEW PART

X ON DEMAND

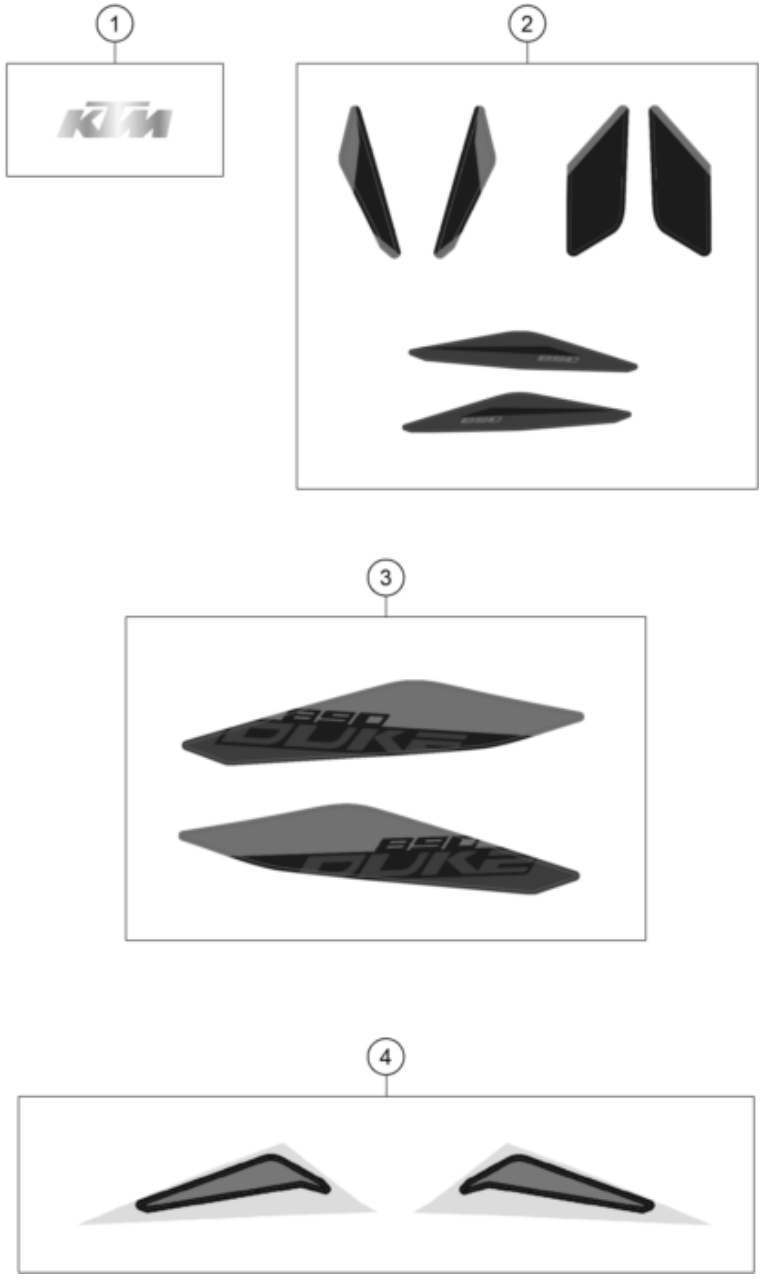

POS	PARTNUMBER	PARTNAME	PIECE
1	61408098000	DEKOR "KTM" 3D 1290 SUPERD. GT	2
2	63608199000	Graphics kit 890 Duke orange 21	1
3	63608090100	Sticker set fuel tank fair.890Duke orang	1
4	64107097100	sticker set passenger seat cover	1

216360830

56239

* NEW PART

X ON DEMAND

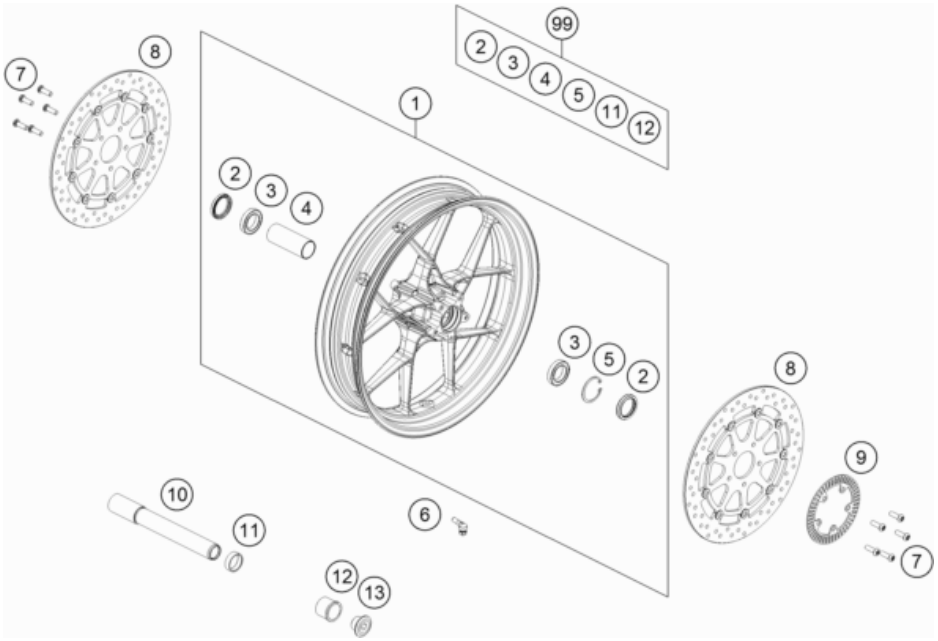

186410910

POS	PARTNUMBER	PARTNAME	PIECE
1	6410900103330	Front wheel 3.5x17 cpl. black	1
2	0760354771	SHAFT SEAL RING 35X47X7 TC	2
3	0625069068	GR.BALL BEAR.6906 DDU2CG23S6NM	2
4	61009011000	BEARING SPACER TUBE FRONT 05	1
5	0472047175	CIRCLIP DIN0472-47X1,75	1
6	61009076100	VALVE ANGLED	1
7	76009062000	SPECIAL SCREW M8X25 SS TX40	10
8	64109060000	brake disc front D=300 mm	2
9	76042020000	Sensor wheel front	1
10	61009081100	Wheel spindle, front	1
11	60009013000	SPACER BUSH. FR. WHEEL R/S 03	1
12	61009012000	SPACER BUSH. FR. WHEEL L/S 05	1
13	61009082000	AH SCREW M25X1,5 WS=12 05	1
99	64109015000	Front Wheel Repair Kit	1

56229

* NEW PART

X ON DEMAND

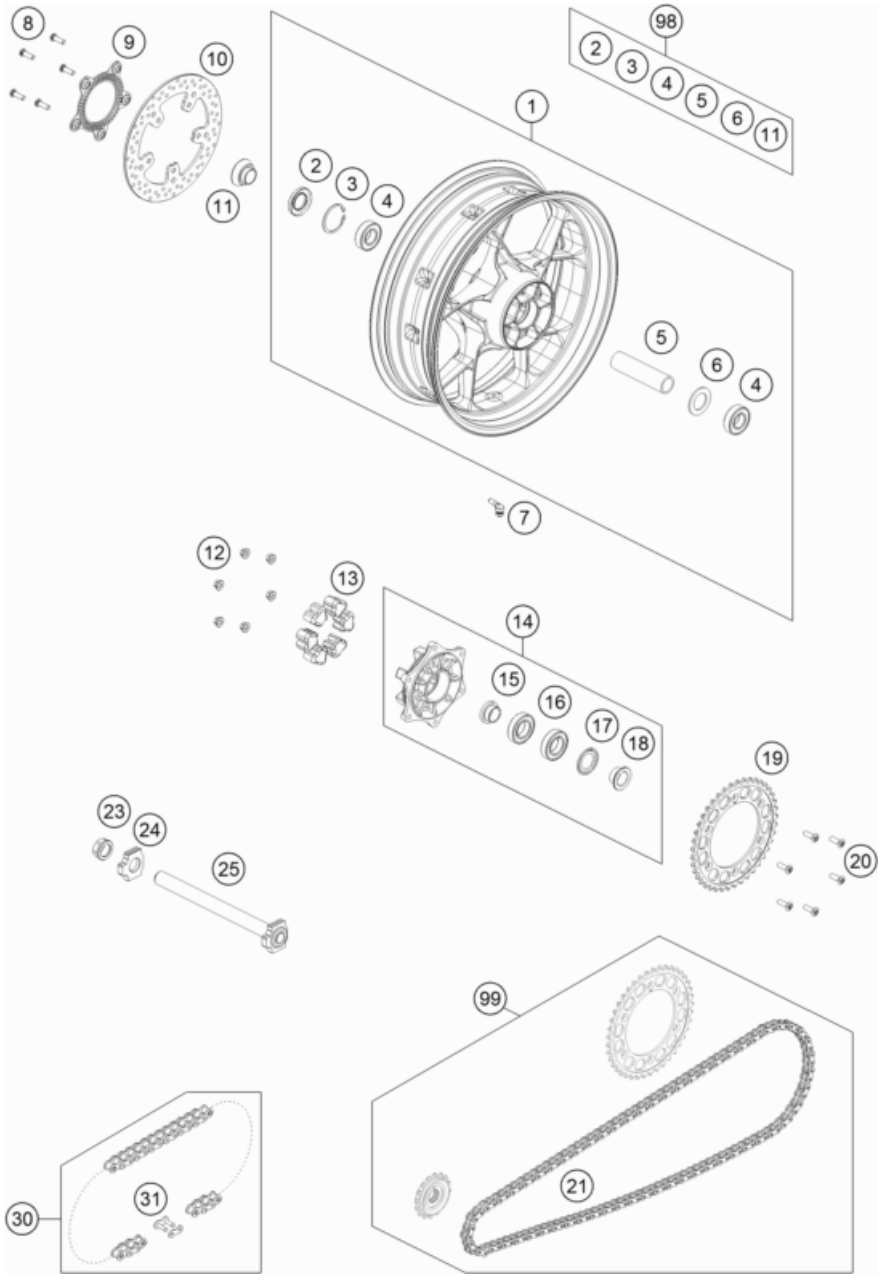

186411010

POS	PARTNUMBER	PARTNAME	PIECE
1	6411000103330	Rear wheel 5,5x 17 cpl. black	1
2	0760305271	SHAFT SEAL RING 30X52X7	1
3	0472052200	CIRCLIP DIN0472-52X2	1
4	0625062052	GR.BALL BEAR. 6205-2RSHC3HMTF7	2
5	60010011000	BEAR. SPACERTUBE L=124,8MM 03	1
6	60010015000	SPACER RING 03	1
7	61009076100	VALVE ANGLED	1
8	76009062000	SPECIAL SCREW M8X25 SS TX40	5
9	76042021100	Rear sensor wheel	1
10	64110060000	Rear brake disc 240x5mm	1
11	64110013000	spacer rear wheel right	1
12	06923080003	hex nut EN 1661 M8 WS13	6
13	54610459000	RUBBER DAMPING BLOCK '91	6
14	7501005004433	Sprocket wheel carrier cpl. Black	1
15	60110014000	SPACER BUSH. SPR. SUPP. IN. 06	1
16	0625060060	BALL BEARING 6006 DDU2CG23S6NM	2
17	60110016000	NILOS RING 6006AV	1
18	60110012000	SPACER BUSH. SPROCKET SUPP. 06	1
19	75010051038	sprocket 38T	x
19	75010051039	sprocket 39T	x
19	75010051040	SPROCKET STEALTH 40T 07	x
19	75010051041	sprocket	1
19	75010051042	SPROCKET STEALTH 42T 07	x
20	0019080266S	COUNTER-SUNK SCREW ISA45 M8X26	6
21	64110065116	Chain x-ring 116 rolls endless	1
23	61010086000	COLLAR NUT M25X1,5 WS=32 05	1
24	60010084000	CHAIN TENSIONER R/S LC8 03	1
25	69010181044	Rear axel cpl.	1
30	78010167118	CHAIN DID 118 LINKS	x
31	78010166100	RIVETING LINK FOR 78010167118	x
98	64110015000	Rear Wheel Repair Kit	x
99	00050002098	Drive Set 16/41	x

56228

* NEW PART

X ON DEMAND

206361110

POS	PARTNUMBER	PARTNAME	PIECE
1	63611075100	Main wiring harness	1
2	61111057000	RELAY CM1A-R-12V-H80 07	5
3	75011087050	RUBBER CASING FOR FUSE BOX	1
4	75011088010	FUSE 10A 07	x
5	61111018100	TEMPERATURE SENSOR	1
6	64111197000	mass cable tank-frame	1
7	64111096000	mass cable starter-frame	1
8	64111097000	mass cable starter-battery	1
9	64111059000	starter cable	1
10	64111076033	Rear Harness cpl.	1
11	64111059050	battery cable	1
12	64111058010	Cover cap starter relay	1
13	0912060083	AH SCREW DIN0912-M 6X 8	2
14	58011109130	FUSE 30 A	2
15	76211058000	STARTER RELAY 07	1
18	64111060133	Direct current horn cpl.	1
19	0024060106	HH COLLAR SCREW M6X10 TX30	1
20	60311034000	VOLTAGE REGULATOR	1
21	0025060206S	HH collar screw M6x20 TX30	2
22	60011093045	RUBBER CABLE TIE 45MM 03	x
23	44011076140	CABLE TIE 140/2,5MM BLACK	x
23	44011076200	CABLE TIE 200/3,6MM BLACK	x
24	69011092000	CABLE TIE W. SOCKET D=6,5	1
25	0025060126	HH collar screw M6x12 TX30	1
26	58411098100	CONTACT WASHER M6 VSV-K6	2
27	0025060166	HH collar screw M6x16 TX30	1

55683

* NEW PART

X ON DEMAND

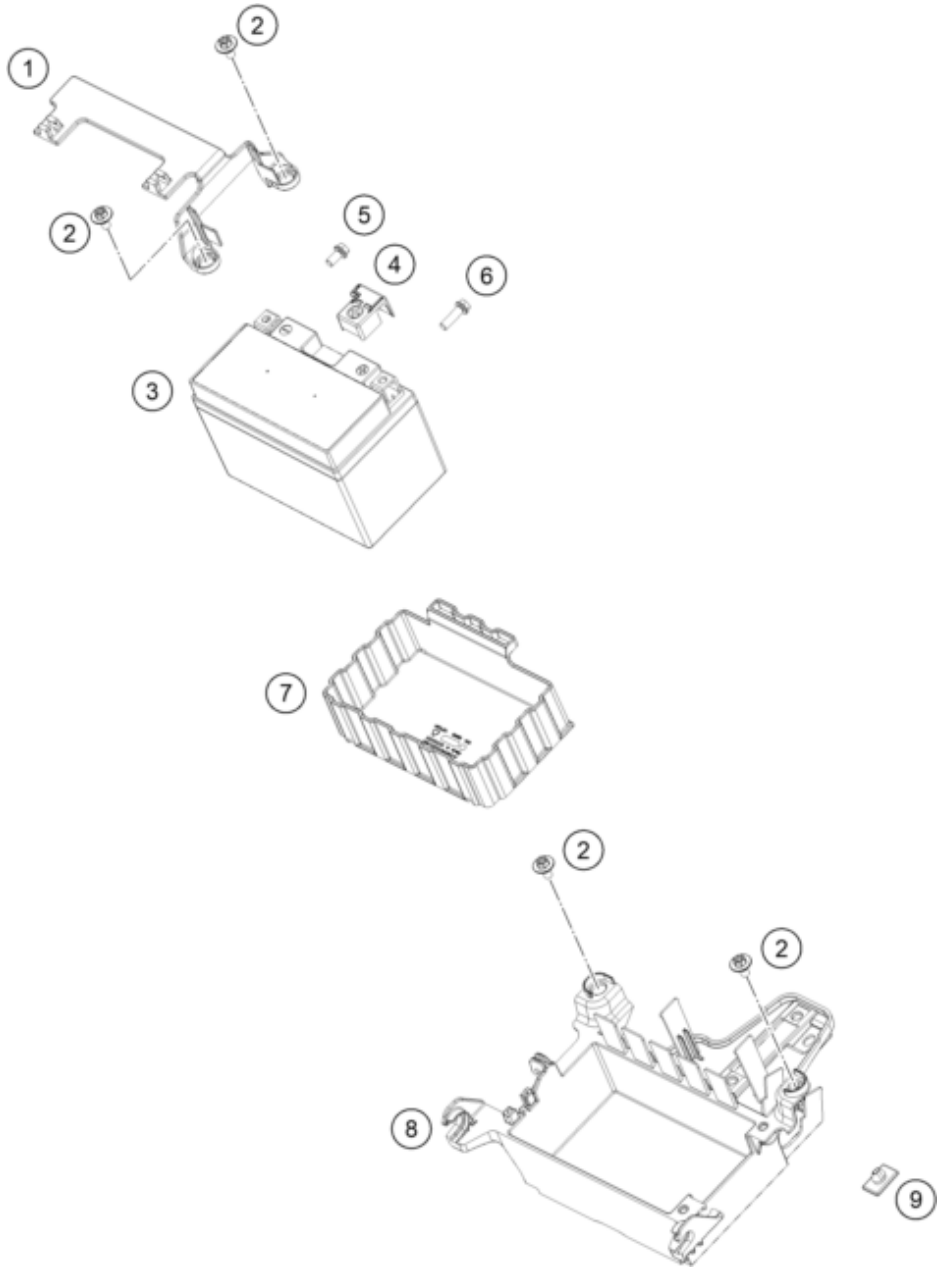

206361130

POS	PARTNUMBER	PARTNAME	PIECE
1	63611055000	Clamp	1
2	83008000012	special screw M6x12x3	4
3	64111053000	battery HTZ12A-BS(DA)	1
4	62111059060	COVER POSITIVE POLE	1
5	0025060126	HH collar screw M6x12 TX30	1
6	0025060206	HH collar screw M6x20 TX30	1
7	64111053050	Accumulator Casing	1
8	63611054000	Battery compartment	1
9	77307040041	Isolation pad	1

53837

* NEW PART

X ON DEMAND

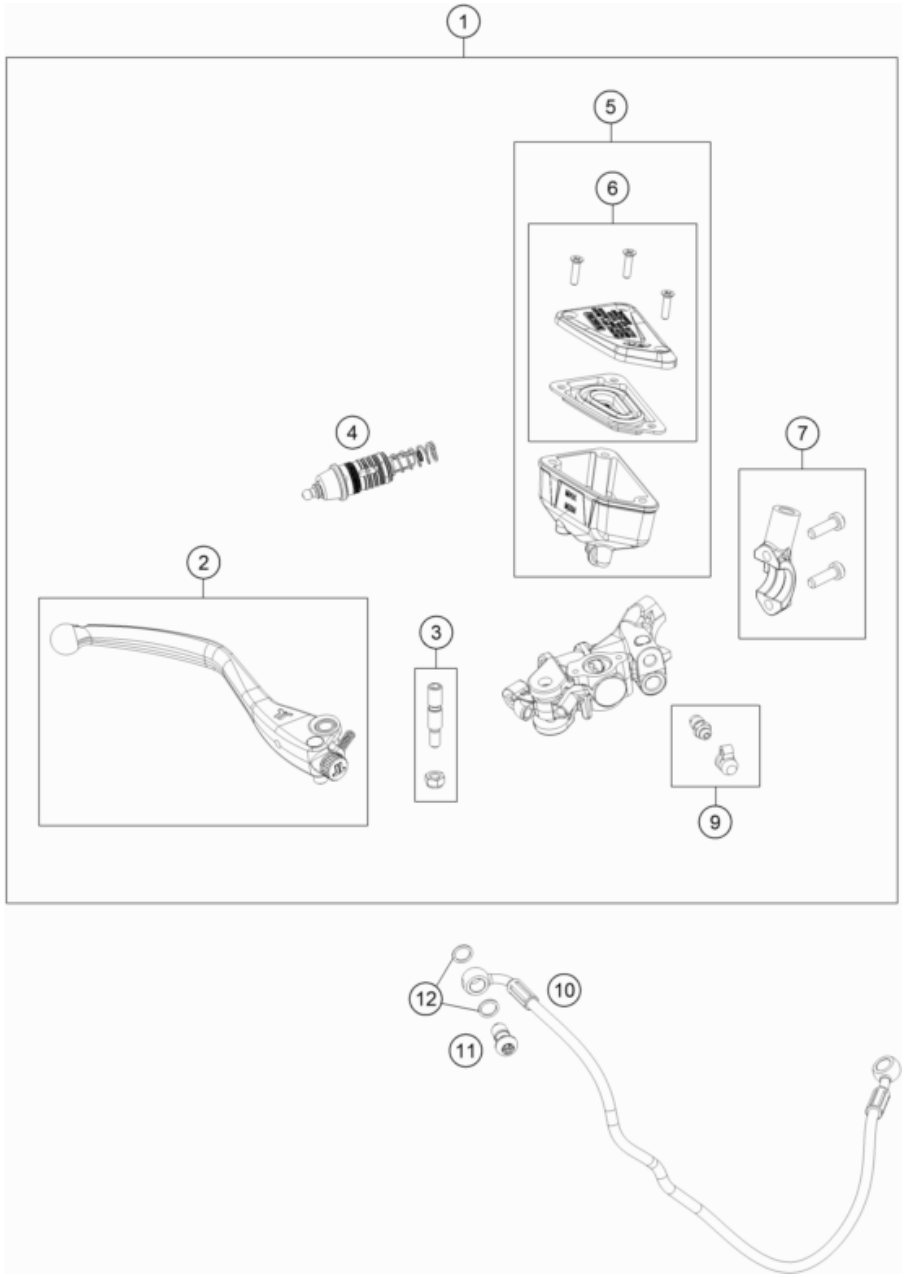

186411310

POS	PARTNUMBER	PARTNAME	PIECE
1	6411300103330	Front master cylinder cmpl. blk.	1
2	64113002000C1	Front brake lever	1
3	64113006000	Lever bolt cpl.	1
4	64113008000	Piston assembly	1
5	64113029044	Reservoir assembly	1
6	64113031000	Reservoir cap cpl.	1
7	6411300500030	Clamp	1
9	64113020000	Bleeder + cap	1
10	64142005000	Hydraulic Front Brake MC-hecu	1
11	62113020100	banjo bolt M10x1x19.5	1
12	0603100141	sealing ring DIN 7603 10x14x1	2

49760

* NEW PART

X ON DEMAND

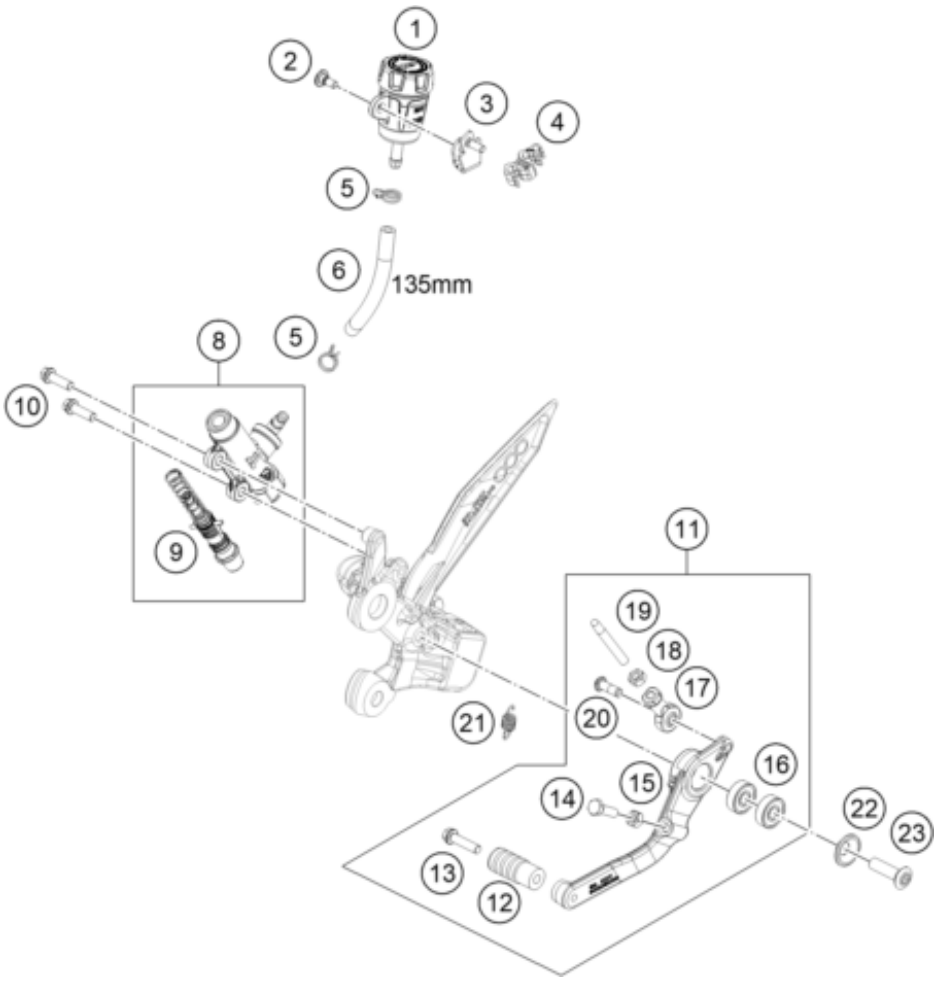

216361330

POS	PARTNUMBER	PARTNAME	PIECE
1	64113069000	Reservoir assembly	1
2	69013099050	SCREW F. EXPANSION TANK	1
3	64113026000	Brake line holder	1
4	64142046000	Bracket ABS line dia7.5	1
5	58007017000	YDNAC CLAMP 10101 (10,4MM)	2
6	69013069001	HOSE FOR RESERVOIR 6X1,5	1
8	6411306000030	Foot master cylinder cpl. black	1
9	64113061000	Piston assembly	1
10	0025060206	HH collar screw M6x20 TX30	2
11	6411305004433	Foot break lever cpl. black	1
12	64103060051	Brake pedal tread Duke	1
13	0025060256S	SK-BUNDSCHRAUBE M6X25 ISA30	1
14	04017060201	Hexagon Screw M6x20-8.8 black	1
15	0934060001	Hexagon Nut DIN 934 M6 black	1
16	0625006087	GROOVED BALL BEAR. 608 2RS C3	2
17	54603069000	SWIVEL HEAD M6 FOOT BRAKE LEV.	1
18	0934060003	hex nut DIN 934 M6	1
19	54603068000	PRESSURE ROD ALU 250 '90	1
20	0738060185S	Ovl. hd. scr. TX M6x16 A2-70 S	1
21	61013052000	SPRING FOOT BRAKE LEVER 05	1
22	64134031020	Fasson Disc D=23x5	1
23	0019080306S	COUNTER-SUNK SCREW ISA45 M8X30	1

56233

* NEW PART

X ON DEMAND

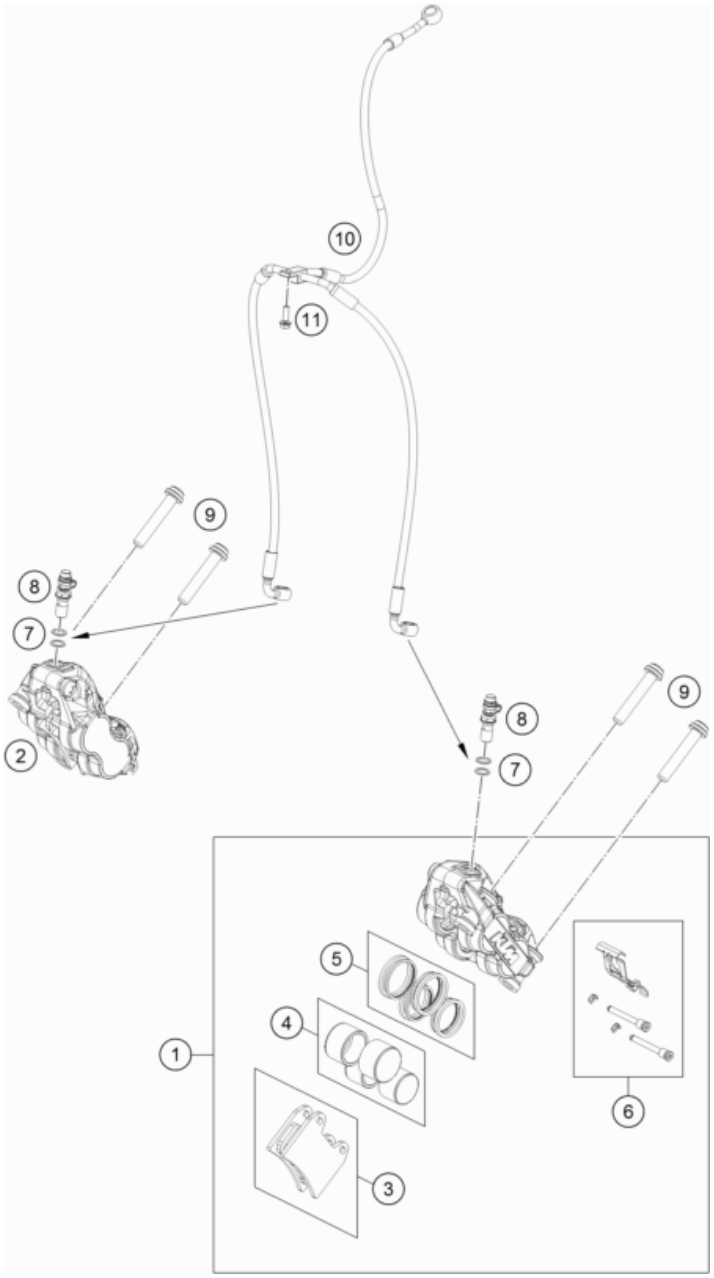

186411360

POS	PARTNUMBER	PARTNAME	PIECE
1	63613015000	Front brake caliper, left	1
2	63613016000	Front brake caliper, right	1
3	63613030000	Front brake pad	2
4	63513019000	Piston set	2
5	63613021000	Seal set	2
6	64113017000	Retaining spring set	2
7	0603100141	sealing ring DIN 7603 10x14x1	4
8	62513020000	BLEEDER SCREW CPL. 05	2
9	0035100559S	AH-COLLAR SCREW M10X1,25X55SS	4
10	64142003000	Hydraulic Front Brake Hecu - Caliper	1
11	0025050166	HH collar screw M5x16 TX30	1

56232

* NEW PART

X ON DEMAND

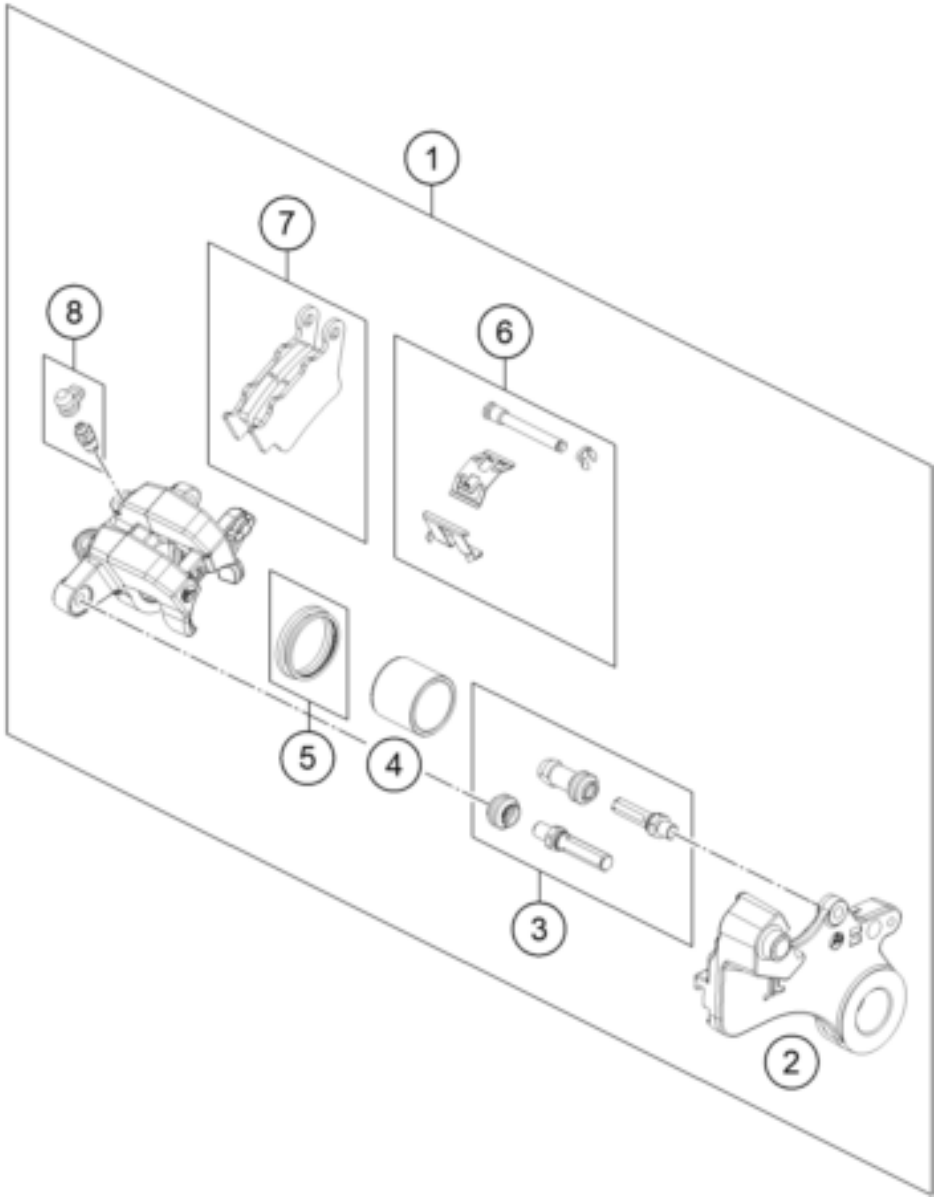

186411390

POS	PARTNUMBER	PARTNAME	PIECE
1	64113080000	brake caliper rear	1
2	64113075000	Brake caliper bracket rear	1
3	64113084000	Cup set	1
4	64113083000	Piston	1
5	64113081000	Square and dust seal set	1
6	64113085000	Retaining spring set	1
7	64113090000	Brake pad set	1
8	64113020000	Bleeder + cap	1

49769

* NEW PART

X ON DEMAND

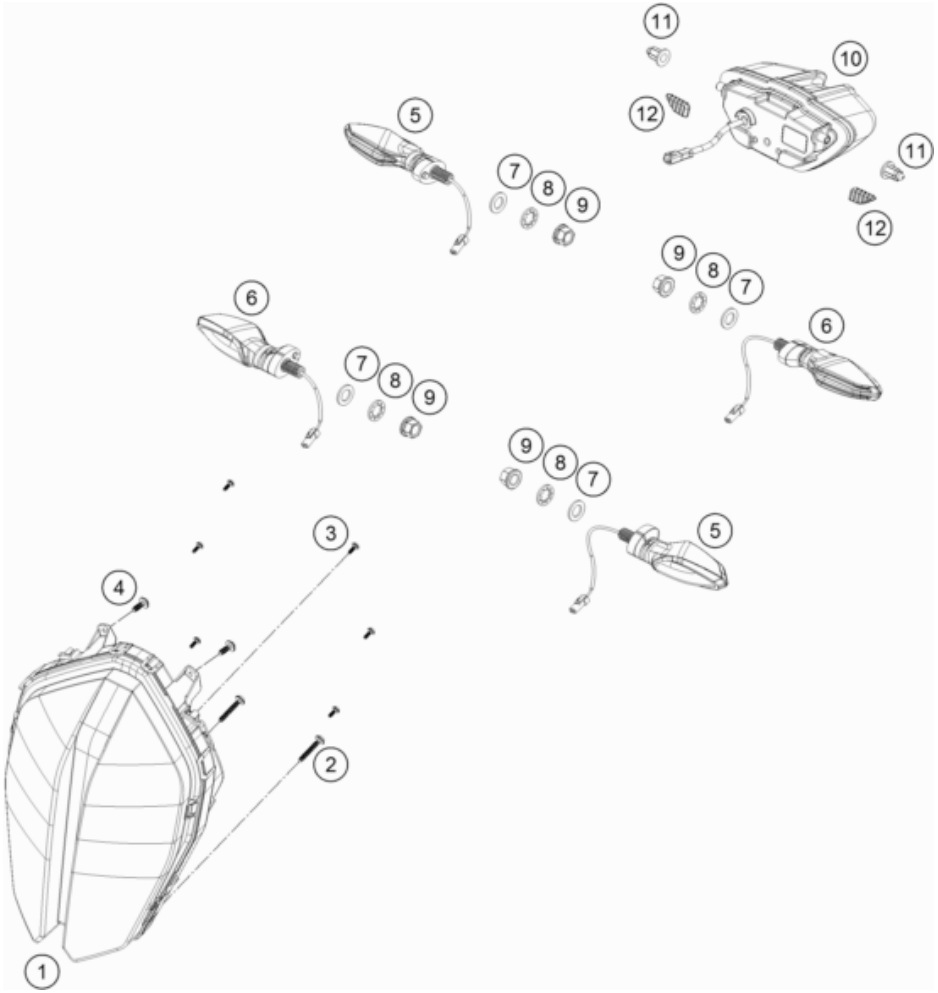

186411410

POS	PARTNUMBER	PARTNAME	PIECE
1	63614001000	Headlight	1
2	0081040253	Ejot PT screw 4x25 WN 5451	2
3	0081030081	Ejot PT screw 3x8 WN 5451 black	6
4	0081045121	SCREW FOR PLASTIC K45X12 T20	2
5	60314025000	turn signal front left/rear right	2
6	60314026000	turn signal front right/rear left	2
7	0433100003	WASHER 18x10,5x1,6	4
8	0797100003	LOCK WASHER DIN6797-J10,5 ZI	4
9	58414030000	HH COLLAR NUT M10X1,25 WS=13	4
10	64114040000	Tail light	1
11	64108015060	Rubber damper top	2
12	64108015070	Rubber damper bottom	2

53828

* NEW PART

X ON DEMAND

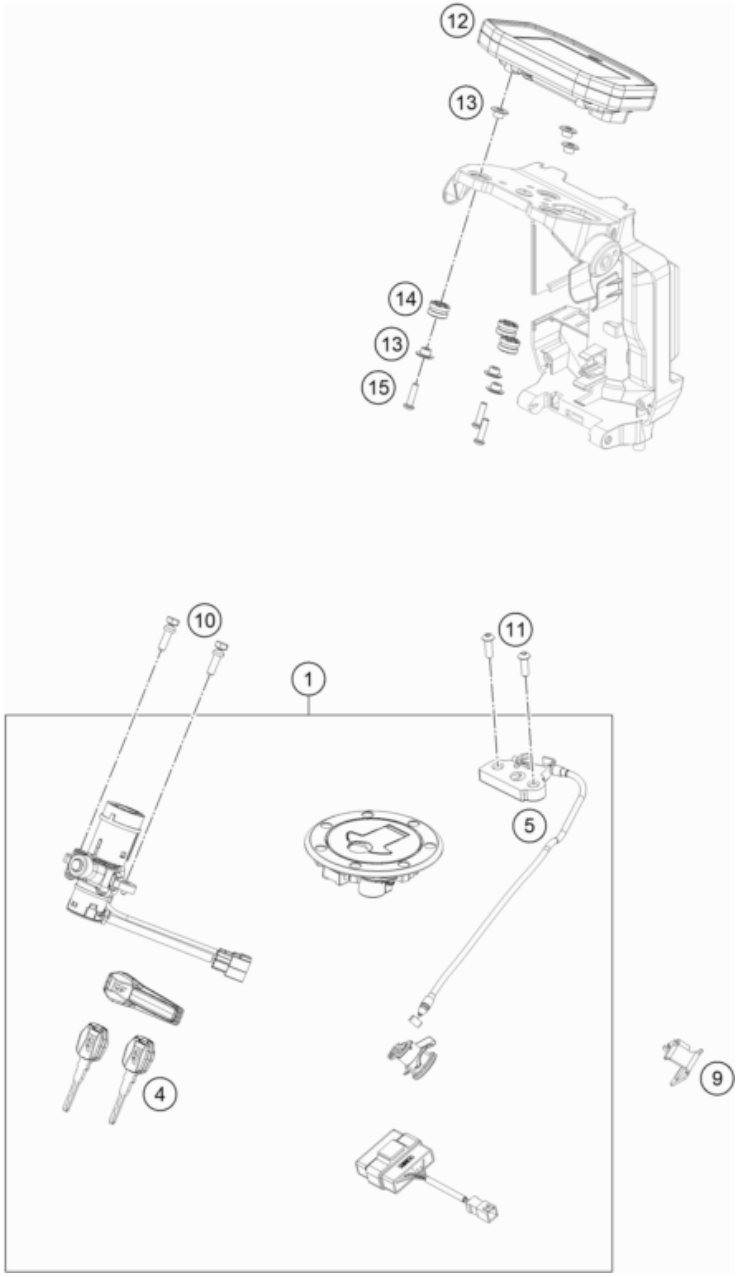

186411430

POS	PARTNUMBER	PARTNAME	PIECE
1	64111066044	Lockset CPL.	1
4	64111067000	KTM ignition key	1
4	64111067010	Blank Key KTM	x
5	64107050000	Seat lock	1
9	64107051000	Cable Bracket Lock	1
10	76011064200	Tear-off screw M6 ignition lock ISA30 MK	2
11	0738060181	BHCS ISO 7380 M6X18	2
12	64114069100	Dashboard	1
13	6071406905033	Bushing, speedometer bracket	6
14	61314069051	DAMP. COMPONENT SPEEDOMETER	3
15	0738050202	Lens head screw ISO 7380-M5X20A2	3

58193

* NEW PART

X ON DEMAND

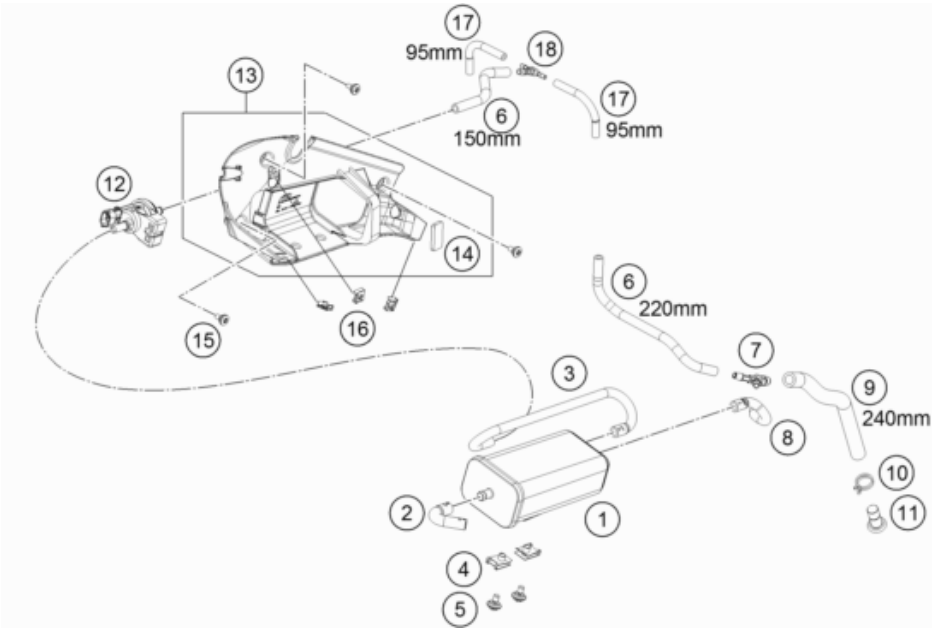

186411510

POS	PARTNUMBER	PARTNAME	PIECE
1	75015001200	CARBON CANISTER	1
2	64115021000	ventilation hose evap. can.	1
3	64115022000	hose evap. ca. - purgevalve	1
4	54603048300	RANGE CHANGE METAL NUT M6 INOX	2
5	83008000012	special screw M6x12x3	2
6	78015019000	HOSE EPA D=6/10 L=2000MM	x
7	61315028100	Y-CONNECTOR YS 6-10-6	1
8	64115023000	Molded hose ACF	1
9	78015119000	HOSE EPA D=10/16 L=2000MM	x
10	58431082100	YDNAC-CLAMP 10173 (16MM) '98	1
11	61315026000	PLUG D=10	1
12	76015015000	EVAP valve	1
13	64103081044	Cover left cpl.	1
14	64108070040	Metamoll f. frame cover	1
15	69008021160	special screw M5x12	3
16	69008021080	clip nut M5	3
17	78015021000	HOSE EPA D=4/8 L=2000MM	x
18	64115026000	Hose connection nozzles	1

49795

* NEW PART

X ON DEMAND

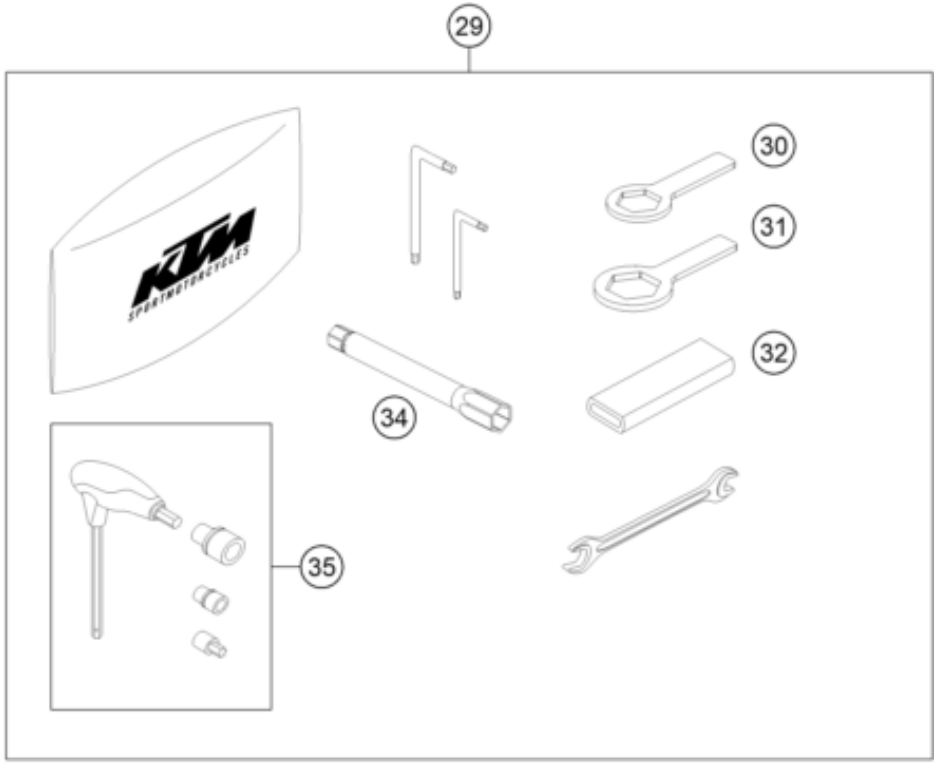

OHNE ABBILDUNG
WITHOUT ILLUSTRATION

0

TECHNISCHE DOKUMENTATION
TECHNICAL DOCUMENTATION
DOCUMENTACION TECNICA
DOCUMENTATION TECHNIQUE
NOTE TECNICHE

1

206362000

POS	PARTNUMBER	PARTNAME	PIECE
0	69008021160	special screw M5x12	2
0	90112040000	MIRROR L/S	1
0	90112041000	MIRROR R/S	1
0	64112008100	Pillion Handle Bar	1
0	0035080506S	AH-COLLAR SCREW M8X50 ISA45	4
0	64112181100	Bracket for reflector	1
0	58412080400	Rear reflector red	1
0	60408061050	RUBBER 14X6.5X2.3MM	2
0	64108023010	Splash protection	1
0	54603048600	RANGE CHANGE METAL NUT M5 INOX	2
0	0081250181	SCREW FOR PLASTIC 50X18 T20	2
0	00063004202	PRINT LABEL 60X51 MM	1
0	00063004012	HEADLIGHT MASK BOX	1
0	00063004204	Self-ad. stkr. 100X200 mm, perf., art. 3	2
1	3214542EN	Owner´s manual 890 DUKE '22	1
29	64129099000	Tool set	1
30	76029063000	RING WRENCH SW27	1
31	60012060032	RING WRENCH 32MM	1
32	60012060000	GRIP FOR RING WRENCH	1
34	75029072000	SPARK PLUG WRENCH	1
35	60029070100	T-WRENCH WS=6/8/10/17	1

58192

* NEW PART

X ON DEMAND

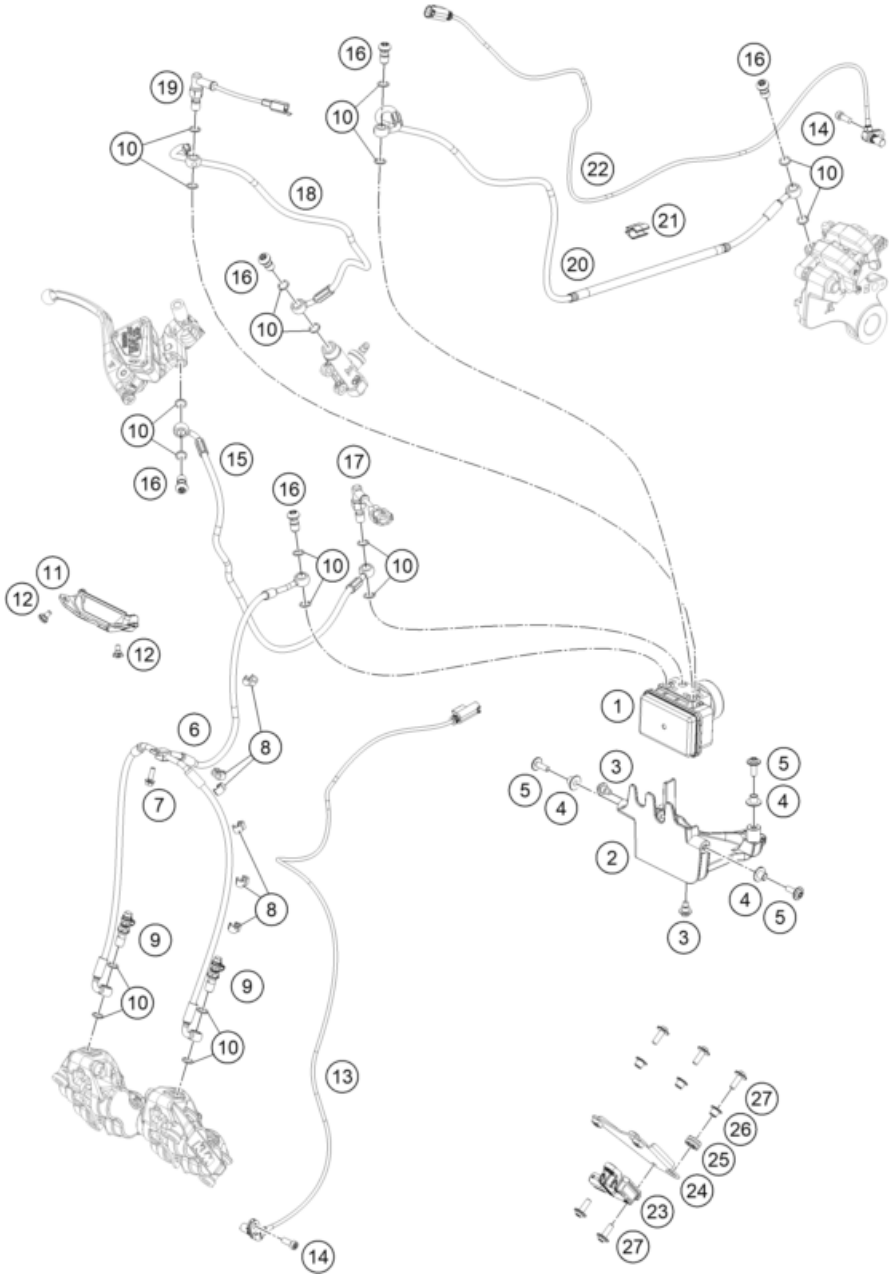

216364210

POS	PARTNUMBER	PARTNAME	PIECE
1	61742031044	ABS module filled	1
2	64142040000	holder ABS module	1
3	59001092050	SPECIAL SCREW M6X12,5 WS=8	2
4	61342041000	COLLAR BUSH 6,5X9X18X8,5	3
5	69014017000	SPECIAL SCREW M6X18 ISA30 08	3
6	64142003000	Hydraulic Front Brake Hecu - Caliper	1
7	0025050166	HH collar screw M5x16 TX30	1
8	60111094100	BAR SPACER 4/7 BLACK	6
9	62513020000	BLEEDER SCREW CPL. 05	2
10	0603100141	sealing ring DIN 7603 10x14x1	18
11	63642003070	Brake line guide	1
12	69008021160	special screw M5x12	2
13	90142125000	ABS SENSOR	1
14	014580060166	SHCS ISO 14580 M6x16	2
15	64142005000	Hydraulic Front Brake MC-hecu	1
16	62113020100	banjo bolt M10x1x19.5	5
17	63711051000	Brake light switch	1
18	64142102000	Brake line, rear master cylinder	1
19	62111051000	BRAKE LIGHT SWITCH REAR	1
20	64142104000	Brake line, rear brake caliper	1
21	54813026100	CABLE SUPPORT 10/4MM 2014	1
22	76042125000	ABS-SENSOR	1
23	61542090000	Angle sensor	1
24	64142090050	Lean Angle Sensor Bracket	1
25	62142041000	DAMP. COMPONENT ABS MODUL	1
26	69014015000	collar bushing 6.1x9.2x15x8.5x1 Al	3
27	69014017000	SPECIAL SCREW M6X18 ISA30 08	5

58112

* NEW PART

X ON DEMAND

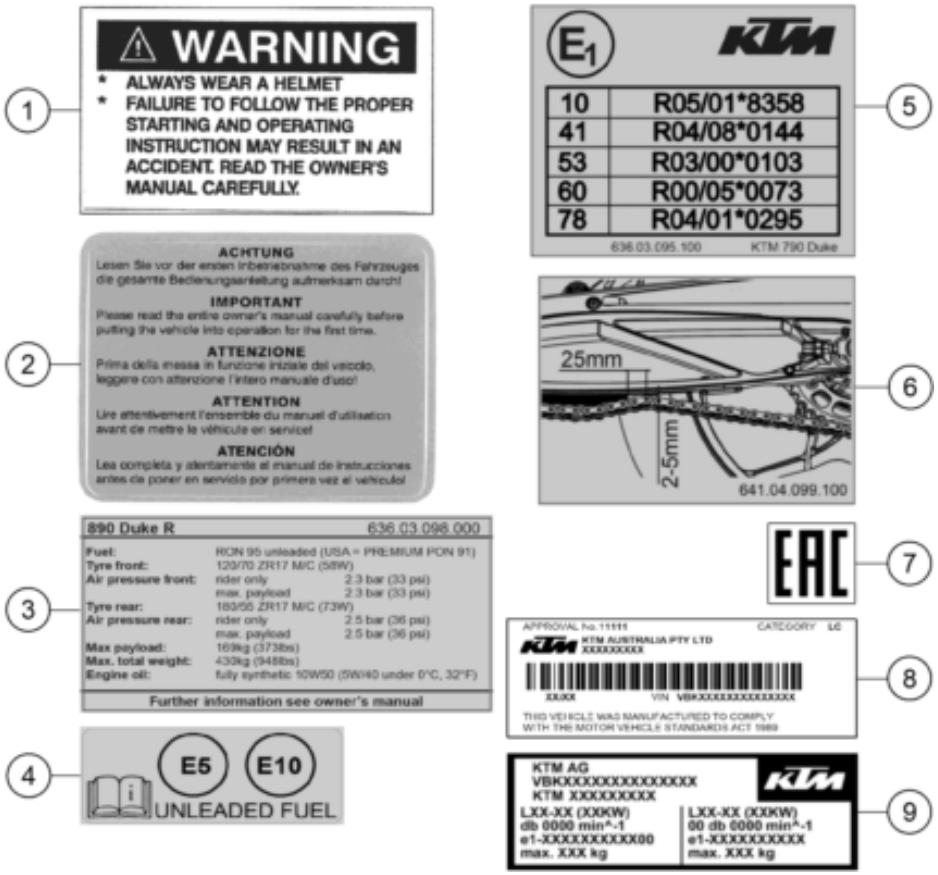

226368016

POS	PARTNUMBER	PARTNAME	PIECE
1	50203098003	Sticker "WARNING LABEL 3"	1
2	50307098000	STICKER ''OWNERS MANUAL''	1
3	63603098000	Tech. info. sticker	1
4	21007098000	Sticker fuel labelling	1
5	63603095100	Sticker ECE	1
6	64104099100	Sticker chain tension	1
7	21003094000	"Sticker ""EAC"""	1
8	LI21-636-3	Typenschild Australien KTM	1
9	LI21-636-2A	Typenschild EU KTM	1

58017

* NEW PART

X ON DEMAND

KTM.COM

F9703V1EN

Art. Nr.: F9703V1EN 1. Dez 2021

KTM Sportmotorcycle GmbH
5230 Mattighofen, Austria
www.ktm.com

KTM_POWERPARTS KTM_POWERWEAR KTM_ORIGINAL SPARE PARTS